I	Elenco pezzi di ricambio	DK	Liste over reservedele	EE	Varuosade nimekiri
GB	Spare Parts List	FIN	Varaosaluettelo	LT	Atsarginės dalys sąrašas
F	Liste pieces detachees	RU	Список запасных частей	TR	Yedek parça listesi
E	Lista Piezas de Repuesto	PL	Lista części zamiennych	SA	قائمة قطع غيار
PT	Lista Peças de reposição	GR	Κατάλογος ανταλλακτικών	BO	Spisak rezervnih delova
D	Lijst van reserve-onderdelen	CZ	Seznam náhradních dílů	HR	Popis rezervnih dijelova
NL	Ersatztelliste	SK	Zoznam náhradných dielov	MAK	Содржина на резервни делови
NO	Reservedeler List	SL	Seznam Rezervni deli	RO	Lista de piese de schimb
SE	Reservdelslista	LV	Rezerves daļu saraksts	BG	Списък с резервни части

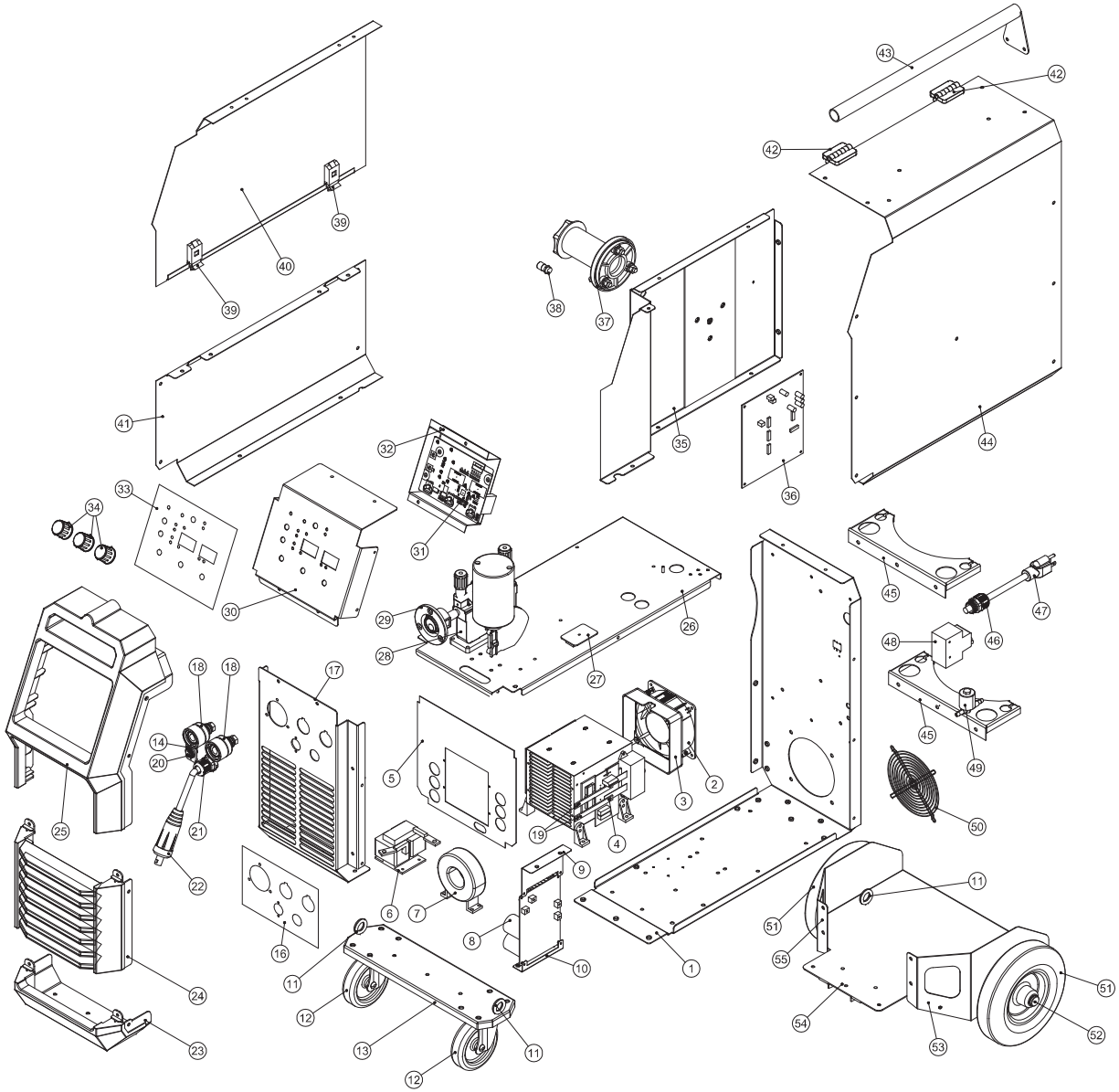

S/N	NAME	Q'TY	CODE
31	Display board	1	AW60350SP
32	Front Plastic Housing	1	M01411SP
33	Facing	1	M01424SP
34	Adjustment Knob	3	M01414SP
35	Middle Plate竖	1	S03559SP
36	Main Control Board	1	AW60310SP
37	Wire Spindle	1	M01415SP
38	Quick Wire-Feeding Knob	1	M01416SP
39	Latch	2	M01432SP
40	Door Plate	1	S03504SP
41	Left Lower Plate	1	S03502SP
42	Hinge	2	M01475SP
43	Handle	1	S03551SP
44	Machine Casing	1	S03507SP
45	Chain Hanging Plate	2	S03552SP
46	Cable Clip	1	M382330SP
47	Power Cable	1	M01584SP
48	Circuit Breaker	1	M01431SP
49	Solenoid Valve	1	M471107SP
50	Fan Net Cover	1	M01418SP
51	Rear Wheel	2	M402755SP
52	Wheel Shaft	1	M265030SP
53	Rear Stiffened Support Plate (Right)	1	S03553SP
54	Rear Pallet	1	S03555SP
55	Rear Stiffened Support Plate (Left)	1	S03554SP

S/N	NAME	Q'TY	CODE
1	Basement Plate	1	S03556SP
2	Fan	1	M500284SP
3	Wind Guide Enclosure	1	M00057SP
4	Moudle	1	M01488SP
5	Dust Guard Plate	1	M00059SP
6	reactor	1	M01520SP
7	Main Transformer	1	M01624SP
8	Power Board	1	AW51010SP
9	Power Hang Plate(Upper)	1	S03562SP
10	Power Hang Plate(Below)	1	S03563SP
11	Ring Screw	4	M896100SP
12	Front Wheel	2	M400180SP
13	Front Wheel Support plate	1	S03546SP
14	Aviation Receptacle	1	M01616SP
16	Sticker	1	M01401SP
17	Front Panel(Below)	1	S03547SP
18	Quick Connector (Male)	2	M431135SP
19	Copper Connection Belt	1	M01444SP
20	Insulating Socket	1	M01545SP
21	Cable Clip	1	M382310SP
22	Quick Connector(Male&Euo)	1	M01621SP
23	Plastic Panel(Below)	1	M01406SP
24	Plastic Panel(Middle)	1	M01407SP
25	Plastic Panel(Upper)	1	M01408SP
26	Middle Plate横	1	S03561SP
27	Output Absorber Plate	1	AW60340SP
28	Wire Feeder	1	M01409SP
29	European Axial Connector	1	M01410SP
30	Front Panel(Upper)	1	S03549SP