SOPORTE OVALADO SERIE UCFL

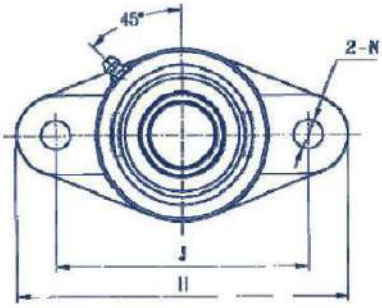

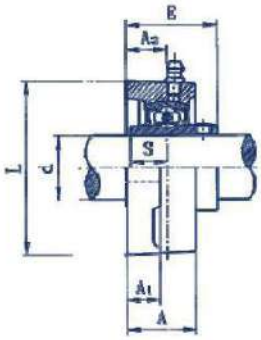

Nº UNIDAD	Ø	Dimensiones (mm)									Métrica	Nº Rod.	Nº Caja	Peso Kg.
		H	J	L	A2	A1	A	E	N	S				
UCFL-202	15	99	76.5	57	15	11	25.5	30.9	11.5	11.5	M10	UC202		0.45
UCFL-203	17	99	76.5	57	15	11	25.5	30.9	11.5	11.5	M10	UC203	FL203	0.43
UCFL-204	20	113	90	60	15	11	25.5	33.3	11.5	12.7	M10	UC204	FL204	0.48
UCFL-205	25	130	99	68	16	13	27	35.7	11.5	14.3	M10	UC205	FL205	0.60
UCFL-206	30	148	117	80	18	13	31	40.2	11.5	15.9	M10	UC206	FL206	0.90
UCFL-207	35	161	130	90	19	14	34	44.4	14	17.5	M12	UC207	FL207	1.20
UCFL-208	40	175	144	100	21	14	36	51.2	14	19	M12	UC208	FL208	1.50
UCFL-209	45	188	148	108	22	16	38	52.2	18	19	M16	UC209	FL209	1.90
UCFL-210	50	197	157	115	22	16	40	54.6	18	19	M16	UC210	FL210	2.20
UCFL-211	55	224	184	130	25	18	43	58.4	18	22.2	M16	UC211	FL211	3.10
UCFL-212	60	250	202	140	29	18	48	68.7	18	25.4	M16	UC212	FL212	4.00
UCFL-213	65	258	210	155	30	20	50	69.7	23	25.4	M20	UC213	FL213	5.00
UCFL-214	70	265	216	160	31	20	54	75.4	23	30.2	M20	UC214	FL214	5.60
UCFL-215	75	275	225	164	34	22	55	78.5	23	33.3	M20	UC215	FL215	6.20
UCFL-216	80	290	233	180	34	22	58	83.3	25	33.3	M22	UC216	FL216	7.80
UCFL-217	85	305	248	190	36	22	63	87.6	25	34.1	M22	UC217	FL217	9.80
UCFL-218	90	320	265	205	40	23	68	96.3	25	39.7	M22	UC218	FL218	12.4