SOPORTE PUENTE SERIE UCP

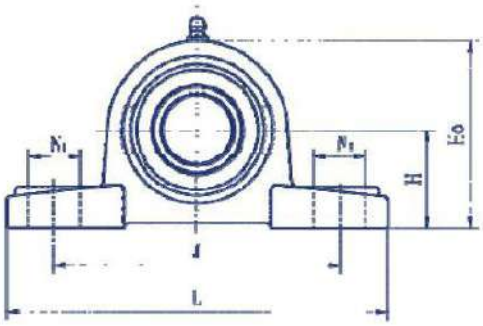

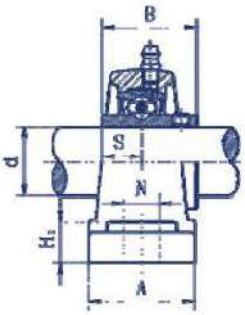

Nº UNIDAD	Ø	Dimensiones (mm)										Métrica	Nº Rod.	Nº Caja	Peso Kg.
		H	L	J	A	N	N1	H1	H0	S	B				
UCP-202	15	30.2	125	96	32	12	16	13	57	11.5	27.4	M10	UC202		0.60
UCP-203	17	30.2	125	96	32	12	16	13	57	11.5	27.4	M10	UC203	P203	0.60
UCP-204	20	33.3	127	96	37	13	16	14	63.8	12.7	31	M10	UC204	P204	0.65
UCP-205	25	36.5	140	105	38	13	19	15	69.5	14.3	34	M10	UC205	P205	0.72
UCP-206	30	42.9	160	121	44	14	19	16	82	15.9	38.1	M12	UC206	P206	1.15
UCP-207	35	47.6	167	126	48	15	19	17	92	17.5	42.9	M12	UC207	P207	1.53
UCP-208	40	49.2	180	136	52	15	21	18	98	19	49.2	M12	UC208	P208	1.88
UCP-209	45	54	189	146	54	15	21	20	105.5	19	49.2	M12	UC209	P209	2.10
UCP-210	50	57.2	204	159	57	19	22	21	112.2	19	51.6	M16	UC210	P210	2.50
UCP-211	55	63.5	217	172	60	19	22	22	124.5	22.2	55.6	M16	UC211	P211	3.30
UCP-212	60	69.9	238	186	66	19	25	24	137	25.4	65.1	M16	UC212	P212	5.50
UCP-213	65	76.2	262	203	70	23	29	26	149	25.4	65.1	M20	UC213	P213	5.60
UCP-214	70	79.4	266	210	72	23	29	27	155	30.2	74.6	M20	UC214	P214	6.60
UCP-215	75	82.6	274	217	74	25	29	28	161.6	33.3	77.8	M20	UC215	P215	7.30
UCP-216	80	88.9	292	232	78	25	30	30	174	33.3	82.6	M20	UC216	P216	8.30
UCP-217	85	95.2	310	247	83	25	30	32	186	34.1	85.7	M20	UC217	P217	10.8
UCP-218	90	101.6	326	262	88	27	30	33	198	39.7	96	M22	UC218	P218	13.0