Registro Mercantil de Madrid Tomo 507 Folio 224 Sección 8 Hoja M-9685 Inscripción 33

Ficha técnica tornillo tirador

T CODE : STWA*MD
T NAME : DOME SCREW
M4x8~M4x55
nsion according to customer spec.
M4x25 Customer special requested, length tolerance ±0.20

DATE	REV	DESCRIPTION
13/11/98	A	INITIAL RELEASE
04/01/99	B	SIZE INCREASING M4x40
09/3/99	C	INCREASE 3 SIZES M4x17/38/55
04/6/99	D	INCREASE 2 SIZES M4x44 & 47
30/10/99	E	INCREASE M4x42
17/7/02	F	TOP MANAGEMENT REQUEST TO CHANGE
20/01/06	G	ADD 35-50
15/12/09	H	MISS OUT 5 SIZES-RO

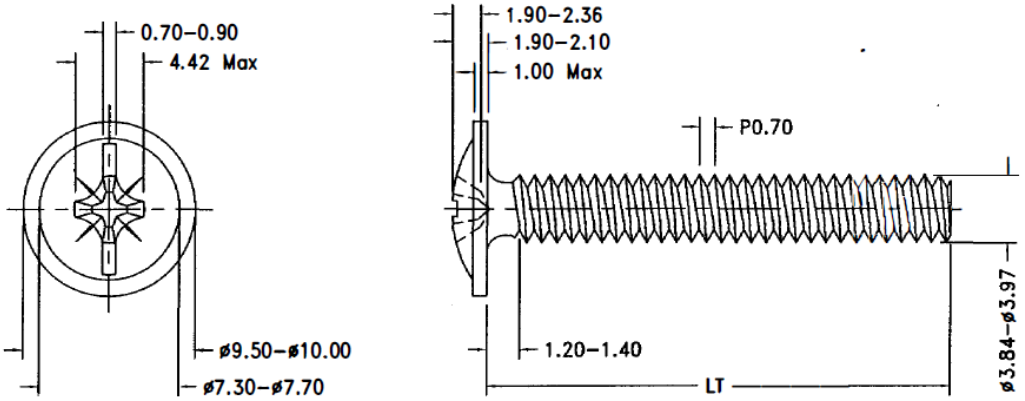

SIZE		M4x8	M4x9	M4x10	M4x12	M4x14	M4x15	M4x16	M4x17	M4x18	M4x19	M4x20	M4x21	M4x22	M4x23	M4x24	M4x25	M4x26
LT	MIN	7.70	8.80	9.70	11.70	13.70	14.70	15.70	16.70	17.70	18.60	19.60	20.60	21.60	22.60	23.60	24.80	25.60
	MAX	8.30	9.20	10.30	12.30	14.30	15.30	16.30	17.30	18.30	19.40	20.40	21.40	22.40	23.40	24.40	25.20	26.40

SIZE		M4x27	M4x28	M4x30	M4x32	M4x33	M4x34	M4x35	M4x36	M4x37	M4x38	M4x40	M4x42	M4x44	M4x45	M4x47	M4x48	M4x50	M4x55
LT	MIN	26.60	27.60	29.60	31.60	32.60	33.60	34.60	35.50	36.50	37.50	39.50	41.50	43.50	44.50	46.50	47.50	49.50	54.50
	MAX	27.40	28.40	30.40	32.40	33.40	34.40	35.40	36.50	37.50	38.50	40.50	42.50	44.50	45.50	47.50	48.50	50.50	55.50

SPAX TORNILLERÍA, S.A.U.
ESA79468385
MADRID C/ Palier 52 - 28914 Leganés (Madrid) Telf.: + 34 91 693 99 11
BARCELONA C/ Industria 12 - 08740 San Andrés de la Barca (Barcelona) Telf.: + 34 93 653 34 00
www.spax.com

DESDE 1823
GRUPO ALTENLOH, BRINCK & CO