VALSUR

Garbage Bin Cabinet

Assembly Instruction

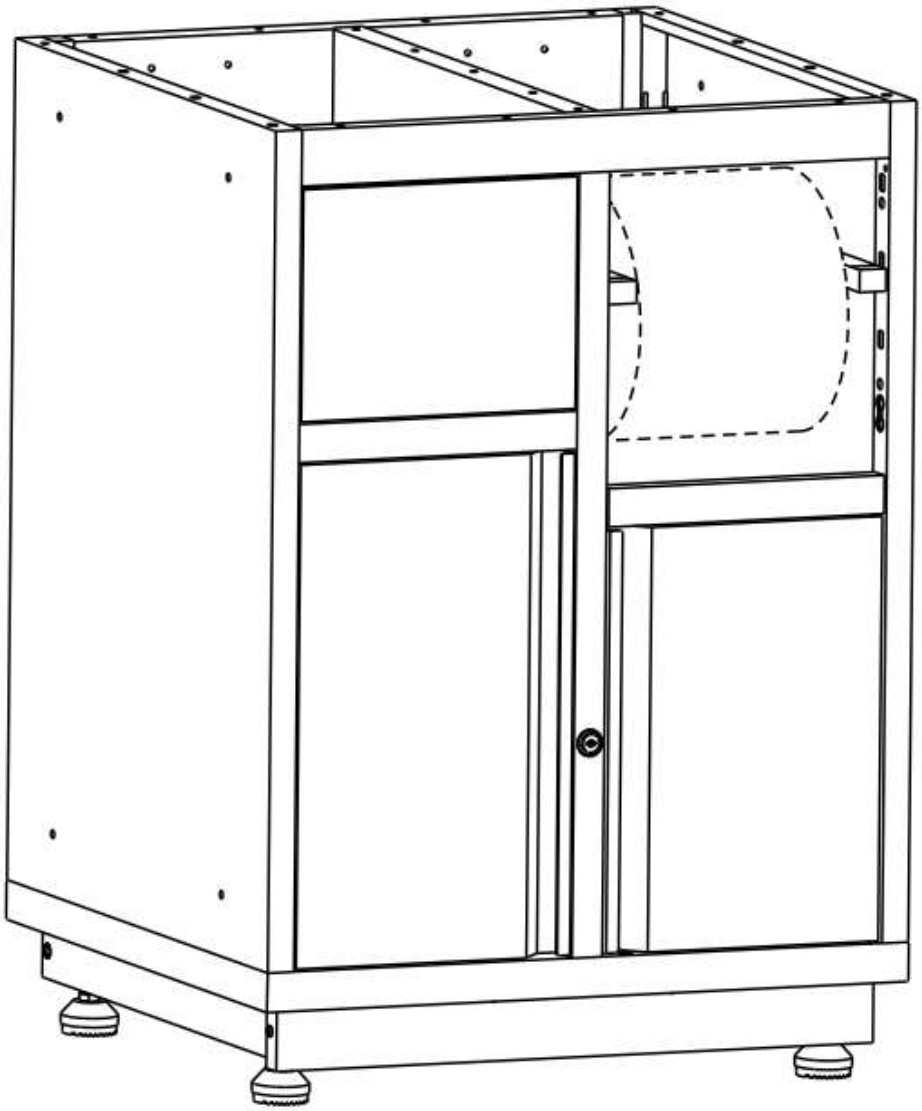

30BC24GN2

THIS INSTRUCTION BOOKLET CONTAINS IMPORTANT SAFETY INFORMATION.
PLEASE READ AND KEEP FOR FUTURE REFERENCE.

SAFETY

Your safety and the safety of others are very important.

We have provided many important safety messages in this manual and on your product. Always read and obey all safety messages.

⚠ CAUTION Please take safety precautions when using the cabinet.

- Do not step or climb on worktop.
- Do not let children near the cabinet.
- Make sure floor is leveled and flat when using the cabinet.
- Two or more people require to move and assemble cabinet.

CARE

1. Wash the cabinet with a mild detergent and warm water. Do not allow water to remain on the cabinet for any length of time.
2. Use a soft and clean cloth that will not scratch the surface when dusting.
3. Liquid spills should be removed immediately. Using a soft clean cloth, blot the spill gently. Avoid rubbing.
4. Check bolts/screws periodically and tighten them if necessary

PARTS

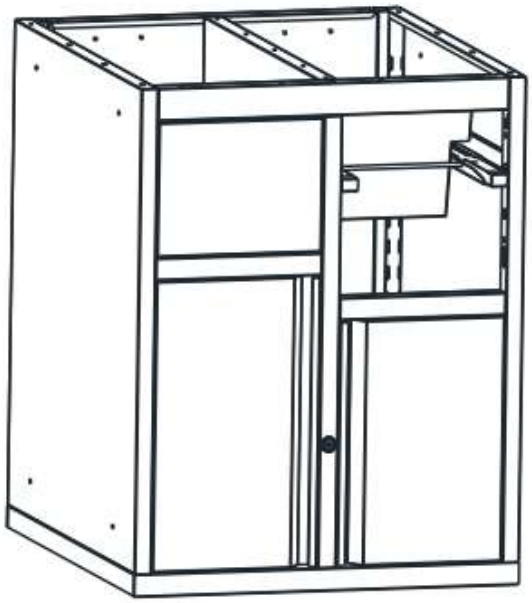

P27(1PCS)

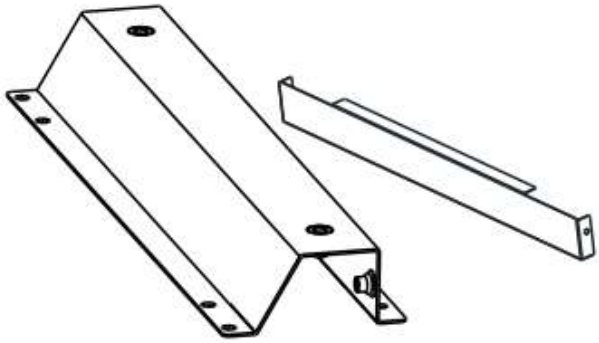

P9(2PCS)

P10(1PCS)

F3 M6
(16PCS)

F4 M8
(8PCS)

F7 M5
(8PCS)

P11(4PCS)

ASSEMBLY INSTRUCTIONS

INSTRUCTIONS

> Intended for use in a garage.
> Maximum weight limit is 550 KG UDL for the cabinet.

ASSEMBLE STEPS

Step 1

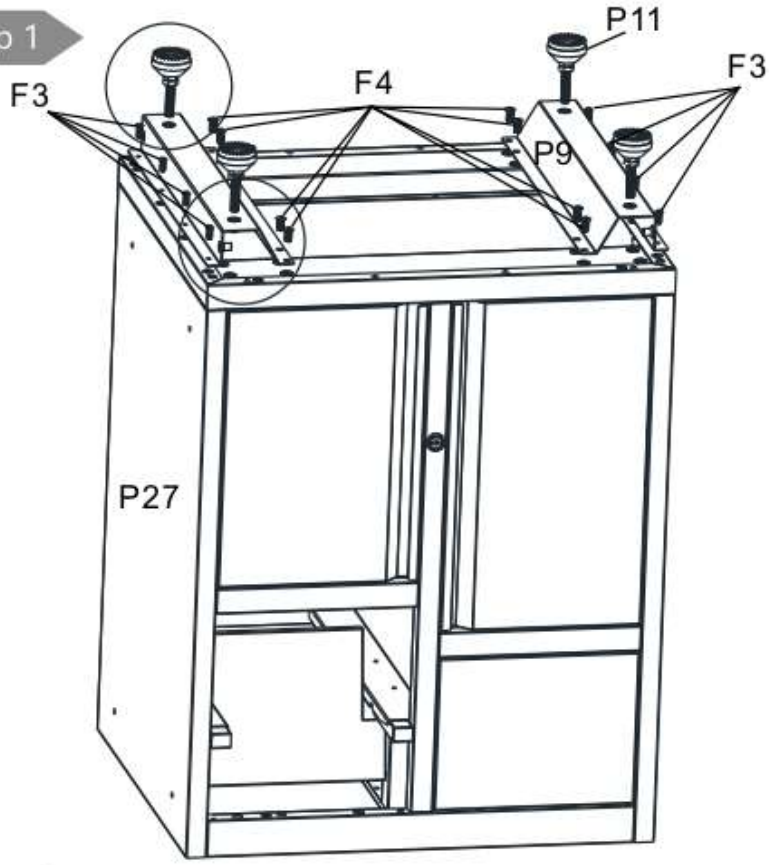

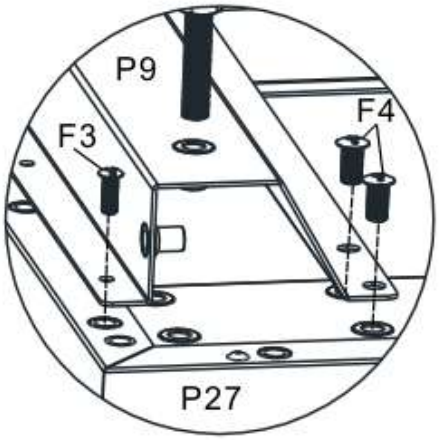

Step 2

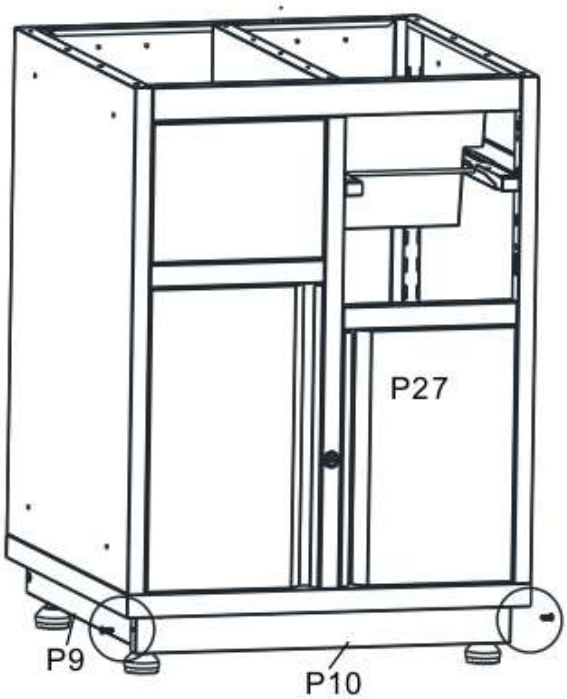

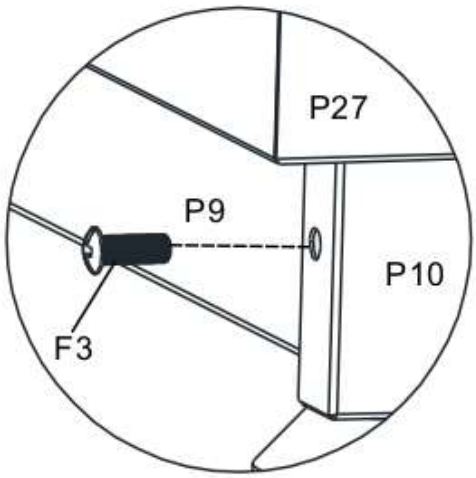

Attention: If this unit connected with other cabinet with racks (SKU: EI–30SB–GS–KB), please connect racks first, then place it in an appropriate position and complete the remaining steps.

Finish

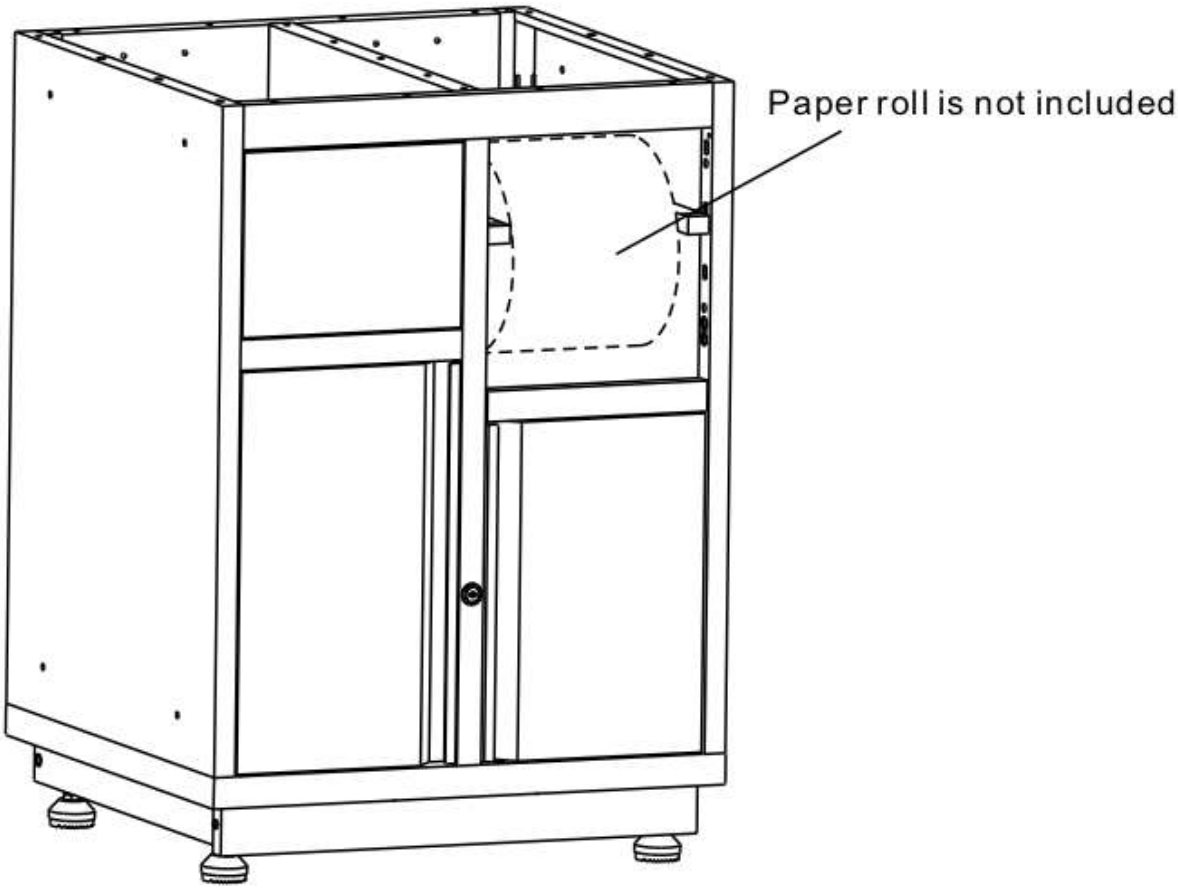

ASSEMBLY STEPS OF WORKTOP

Step 1 Connect with the worktop (sold separately),please refer to the following figure and fol low the steps.

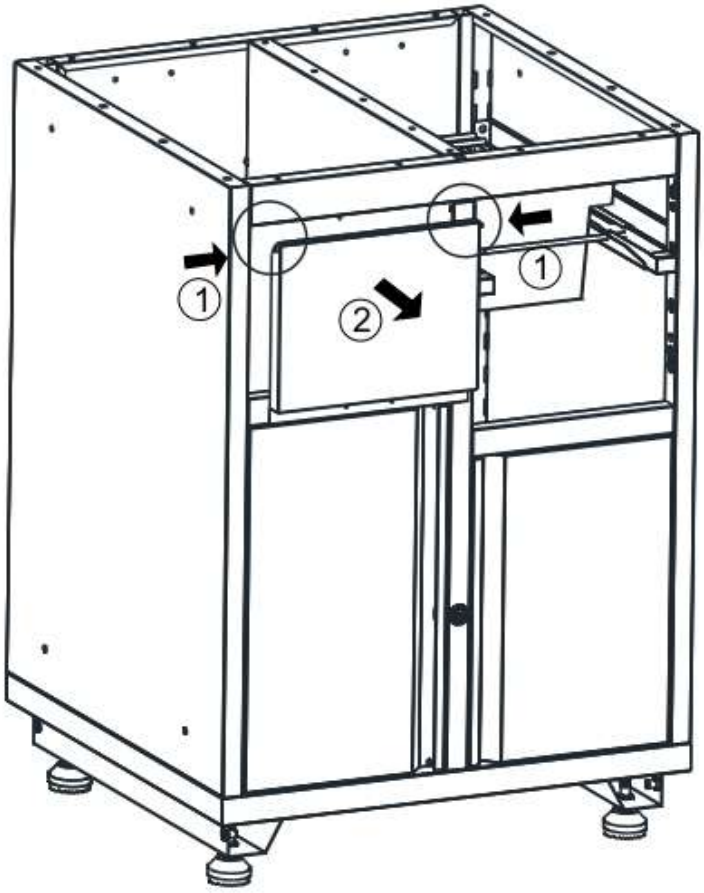

Please take out the bin flap

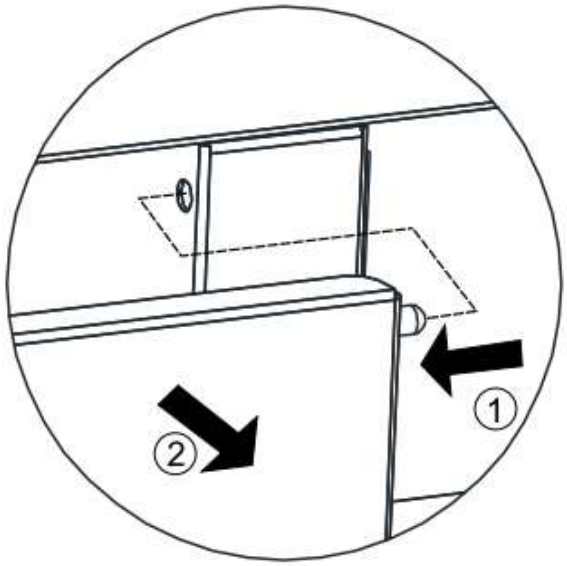

Step 2

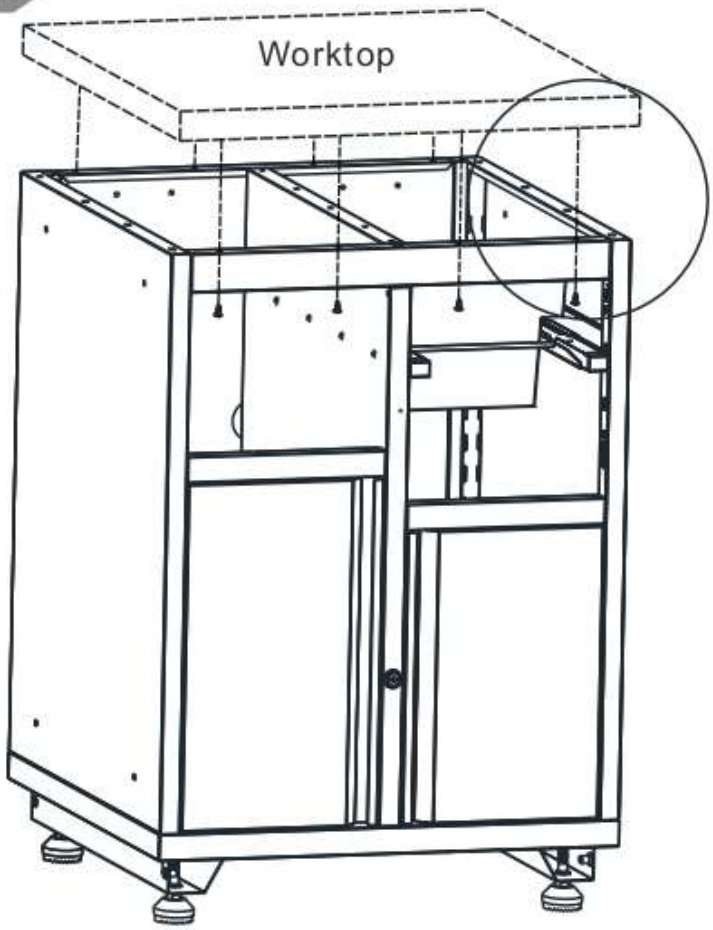

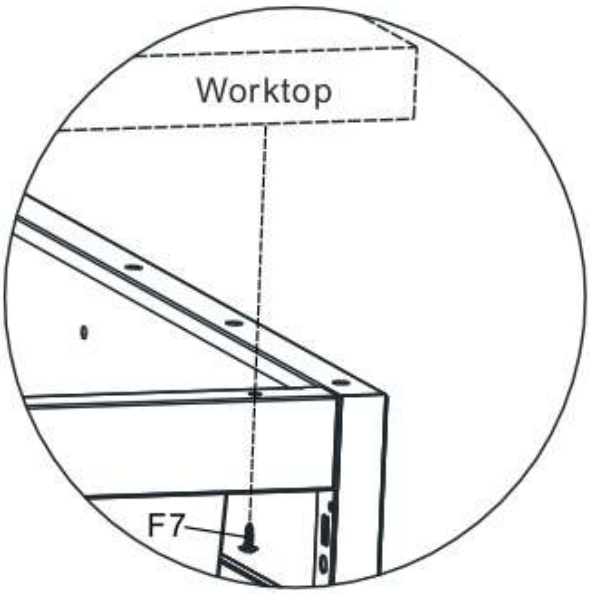

Finish

Please put back the bin flap

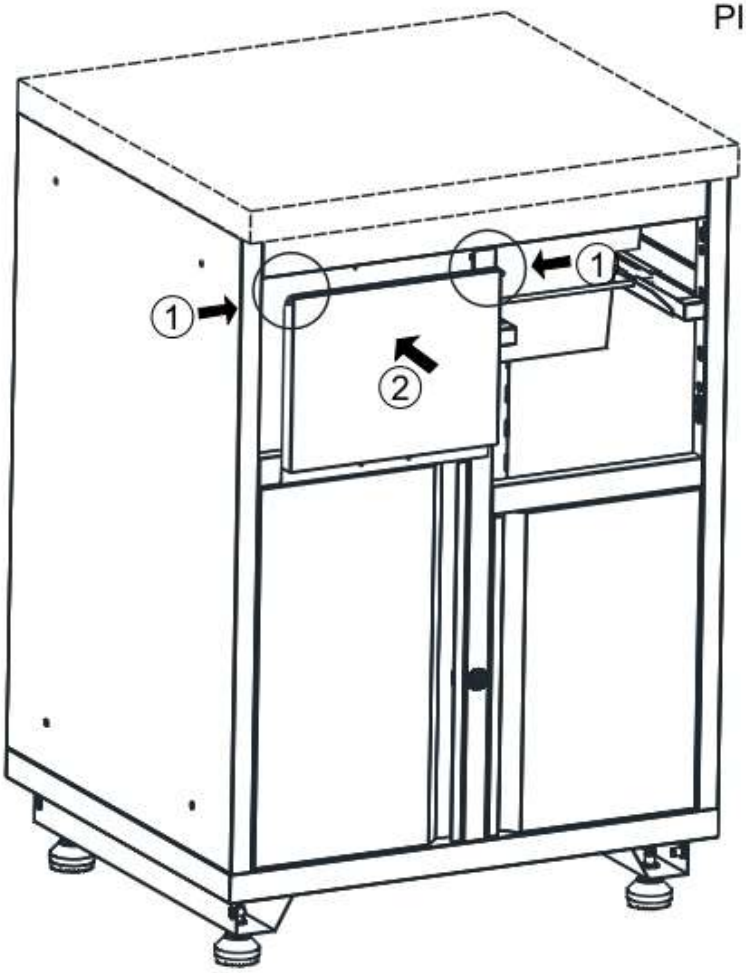

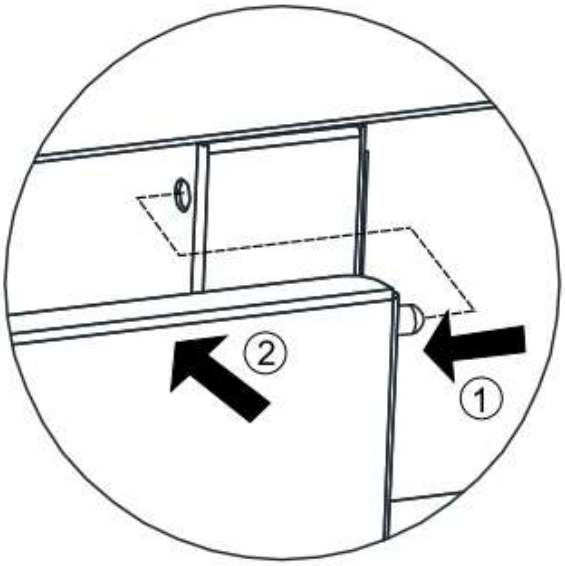

ASSEMBLY STEPS OF TOP CABINET

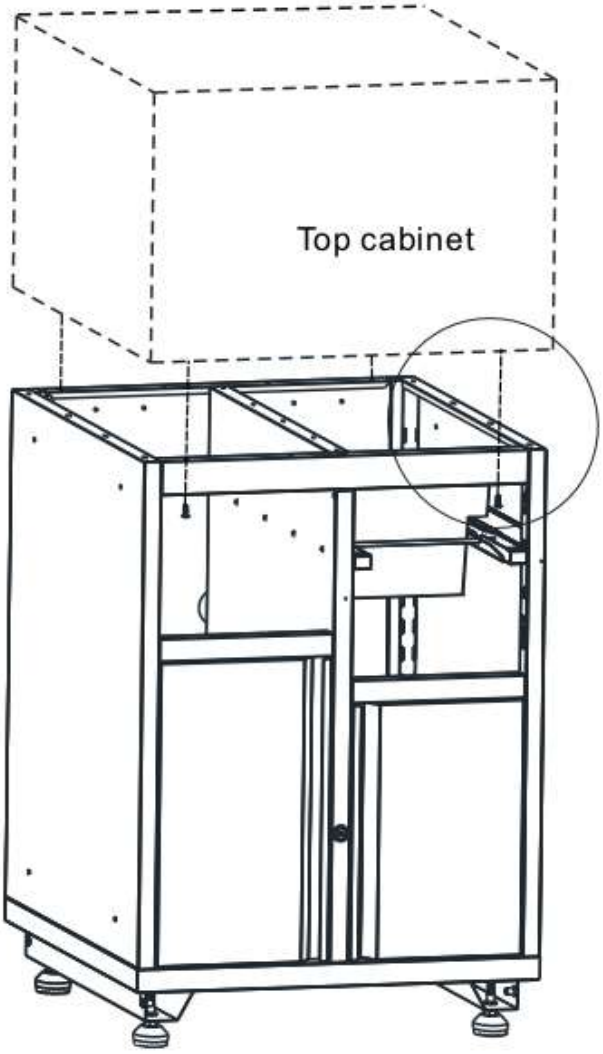

Connect with top cabinets(sold separately), please refer to the following figure and follow the steps

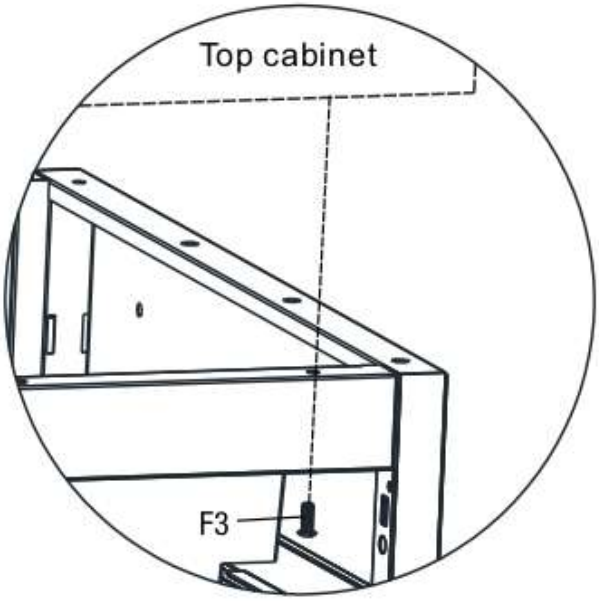

ASSEMBLY STEPS OF PAPER

Paper roll is not included

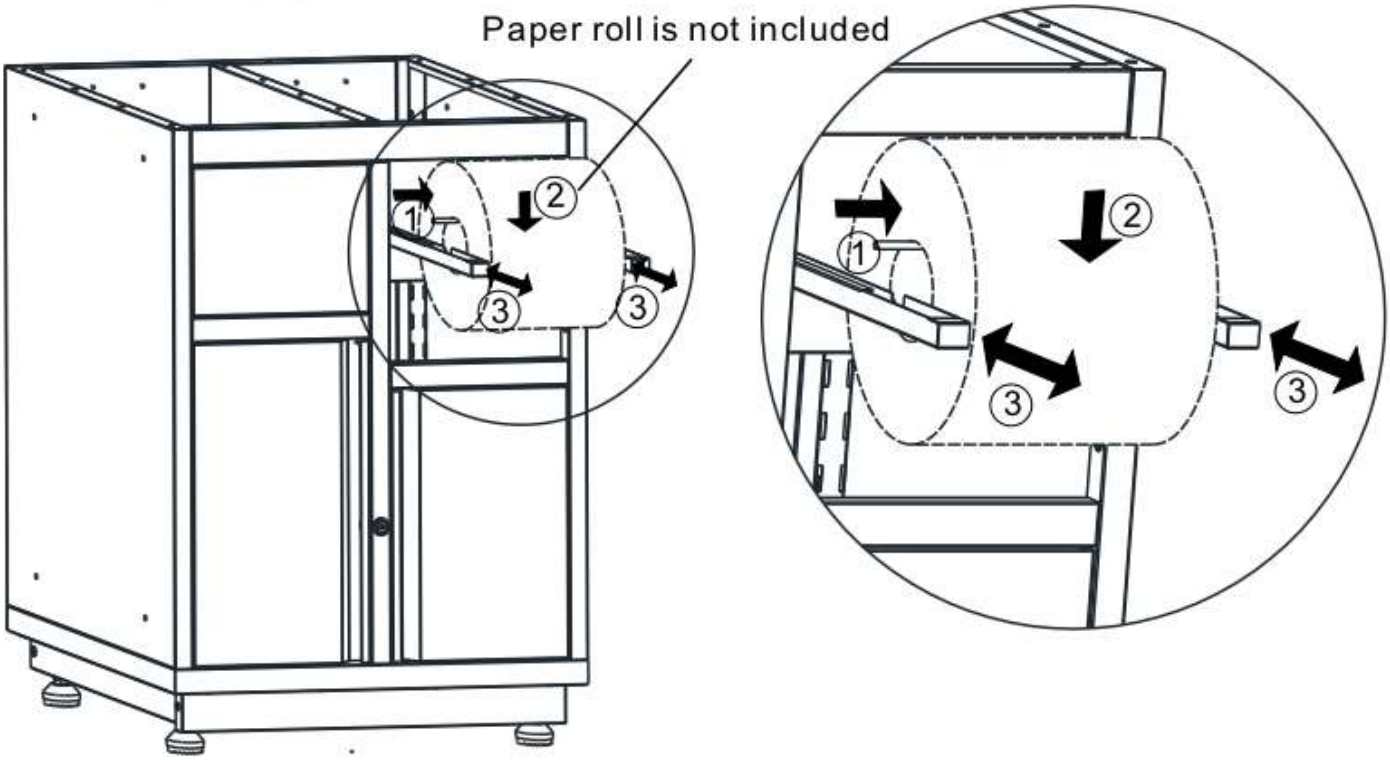

VALSUR

5 Drawers Base Cabinet

Assembly Instruction

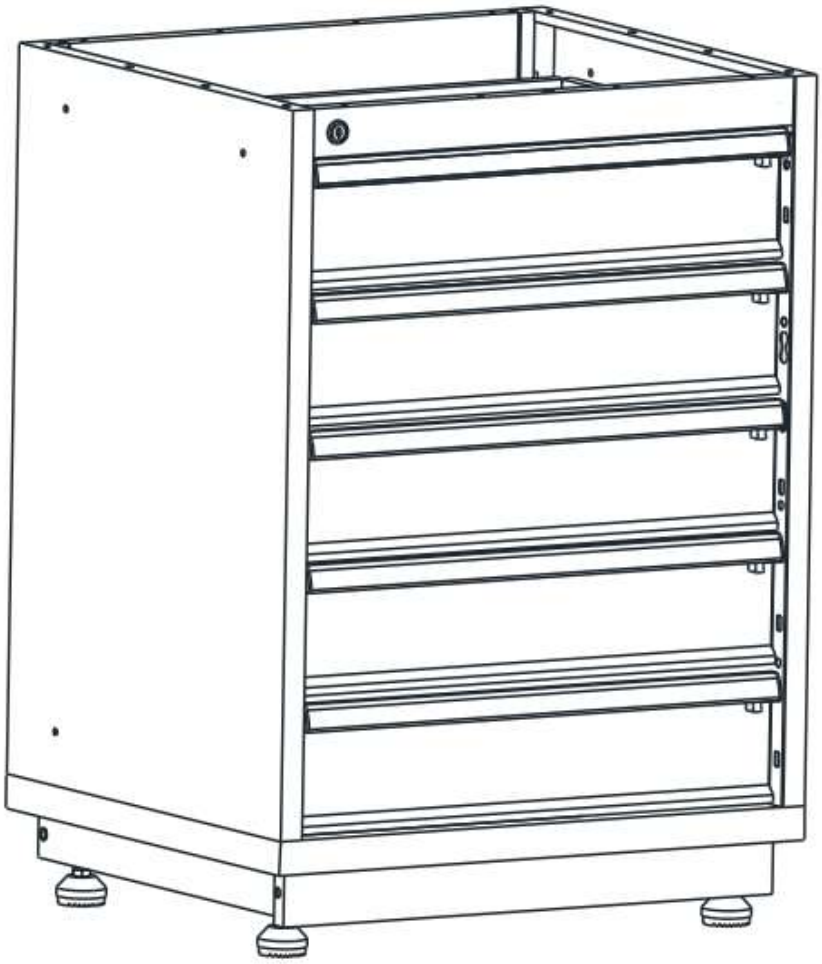

30BC240N5

THIS INSTRUCTION BOOKLET CONTAINS IMPORTANT SAFETY INFORMATION.
PLEASE READ AND KEEP FOR FUTURE REFERENCE.

SAFETY

Your safety and the safety of others are very important.

We have provided many important safety messages in this manual and on your product. Always read and obey all safety messages.

⚠ CAUTION Please take safety precautions when using the cabinet.

- Do not step or climb on worktop.
- Do not let children near the cabinet.
- Make sure floor is leveled and flat when using the cabinet.
- Two or more people require to move and assemble cabinet.

CARE

1. Wash the cabinet with a mild detergent and warm water. Do not allow water to remain on the cabinet for any length of time.
2. Use a soft and clean cloth that will not scratch the surface when dusting.
3. Liquid spills should be removed immediately. Using a soft clean cloth, blot the spill gently. Avoid rubbing.
4. Check bolts/screws periodically and tighten them if necessary.

PARTS

P28(1PCS)

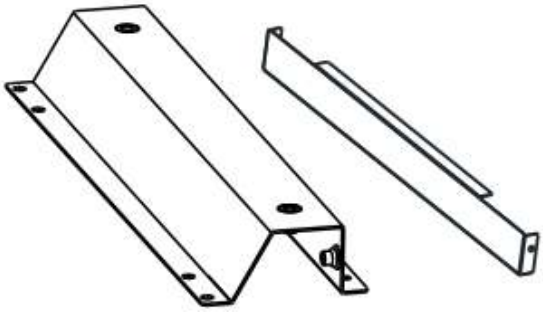

P9(2PCS)

P10(1PCS)

P11(4PCS)

F3 M6
(16PCS)

F4 M8
(8PCS)

F7 M5
(8PCS)

MAXIMUM RECOMMENDED WEIGHT LOADS

> Intended for use in a garage
> Maximum weight limit is (550 kg) UDL for the cabinet.

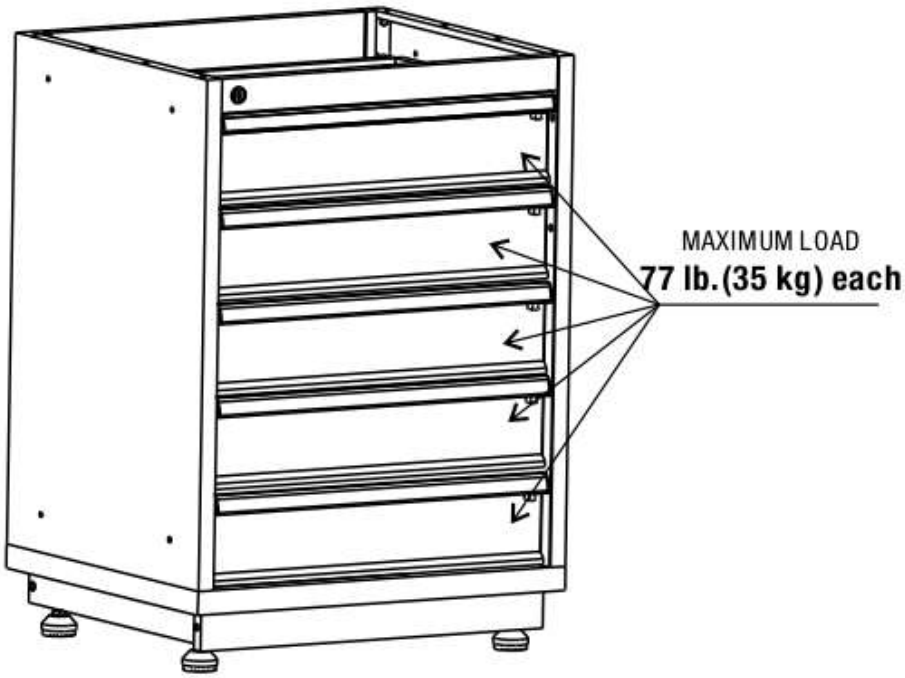

ASSEMBLY INSTRUCTIONS

ASSEMBLE STEPS

Step 1

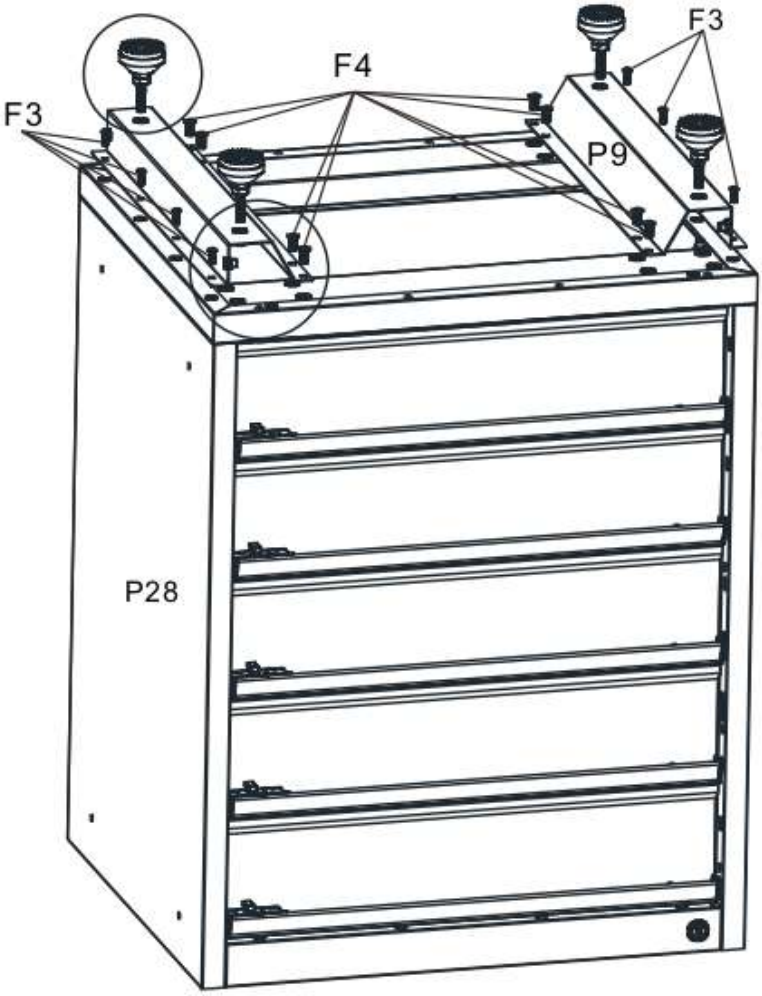

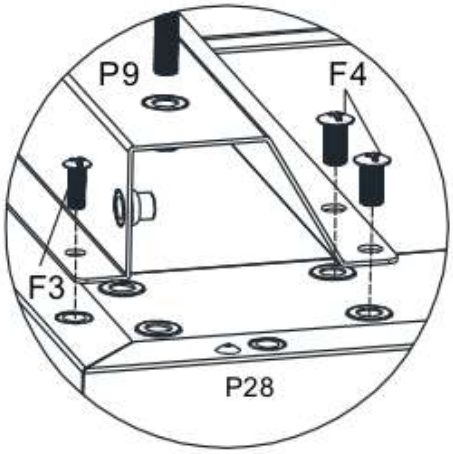

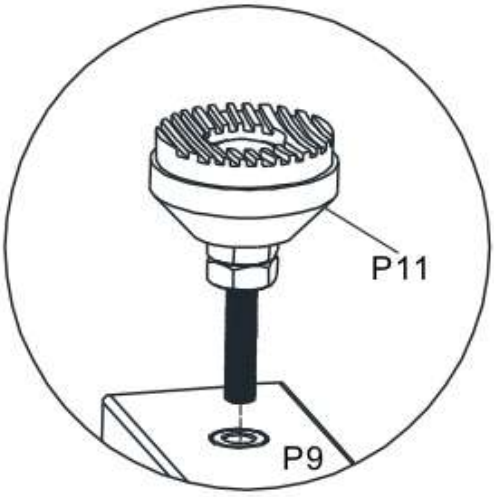

Step 2

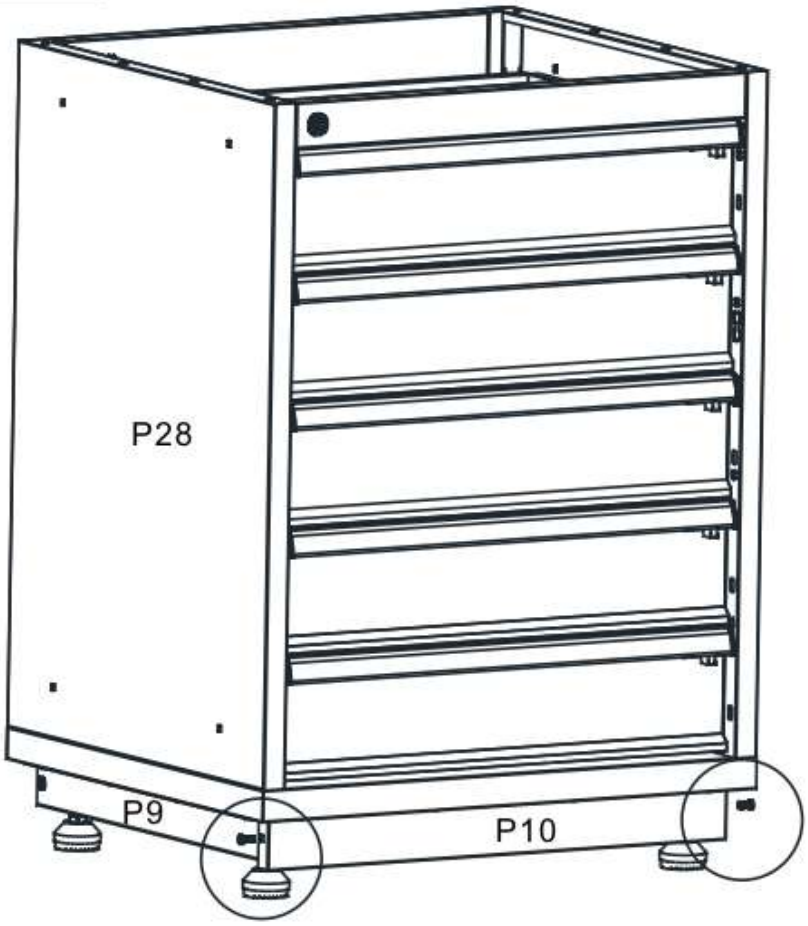

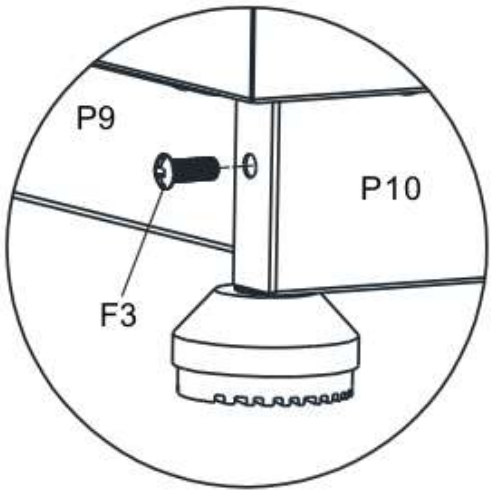

Attention: If this unit connected with other cabinet with racks (30SA01), please connect racks first, then place it in an appropriate position and complete the remaining steps.

ASSEMBLY STEPS OF WORKTOP

Step 1 **Connect with the worktop (sold separately),please refer to the following figure and follow the steps**

Remove the drawer according to the Drawer disassembly steps 1–3, as shown below;

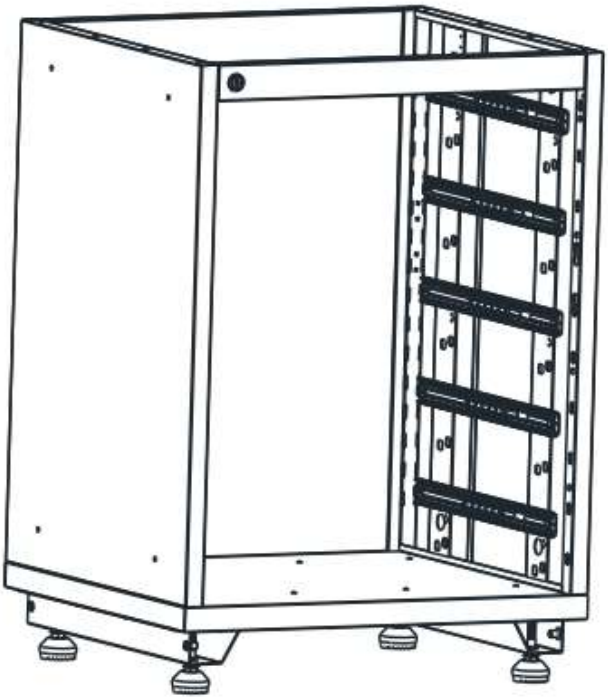

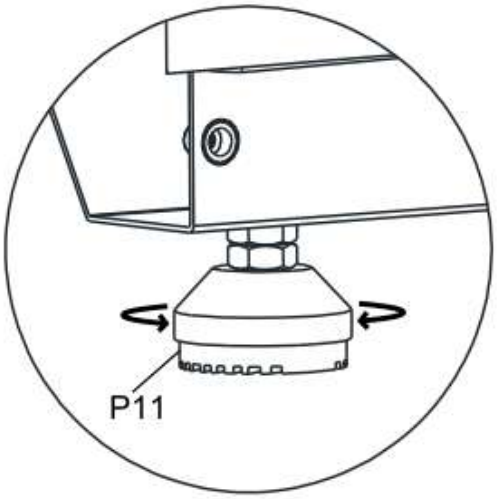

Notes that if the ground is slightly not level, you can adjust by rotating P11 to make the cabinet level stable and easy to connect the rack.

Step 2

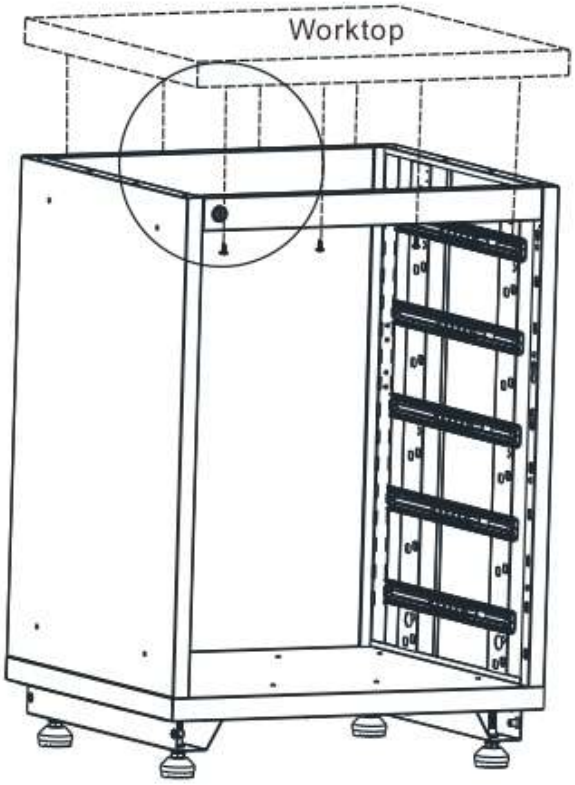

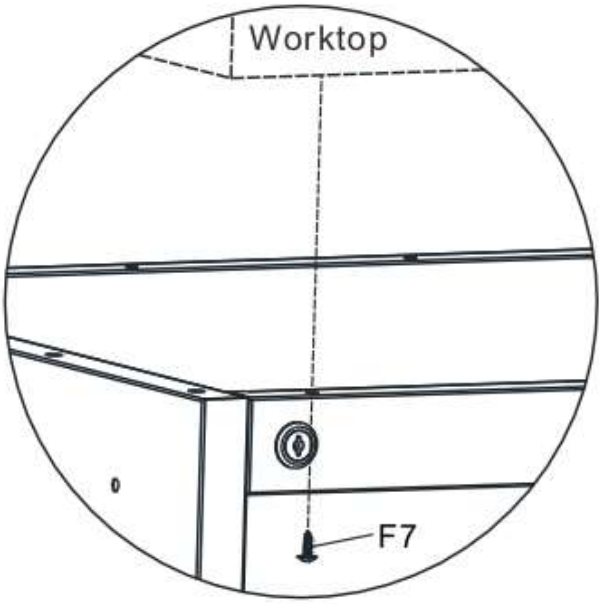

ASSEMBLY STEPS OF TOP CABINETS

Connect with top cabinets (sold separately),please refer to the following figure and follow the steps .

Remove the drawer according to the drawer disassembly steps 1–3, as shown below.

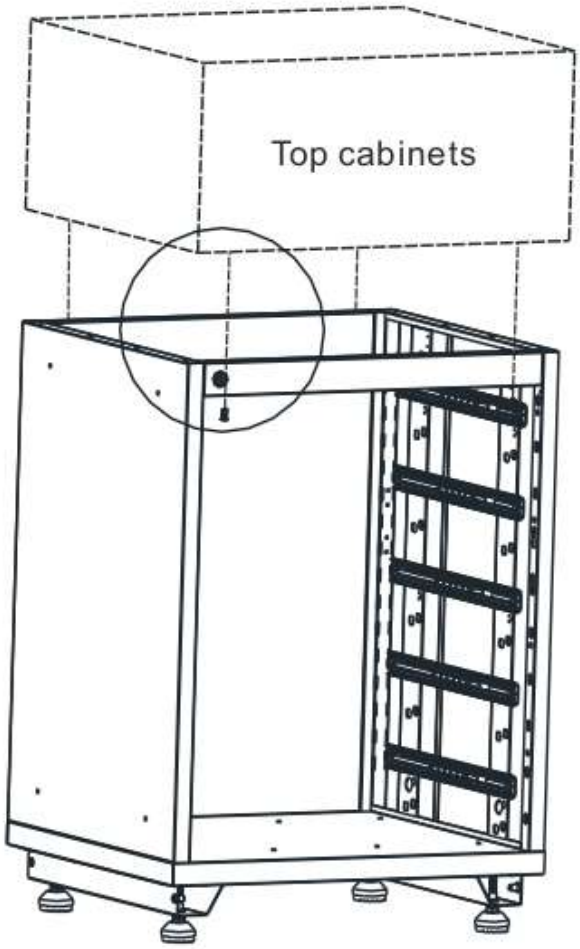

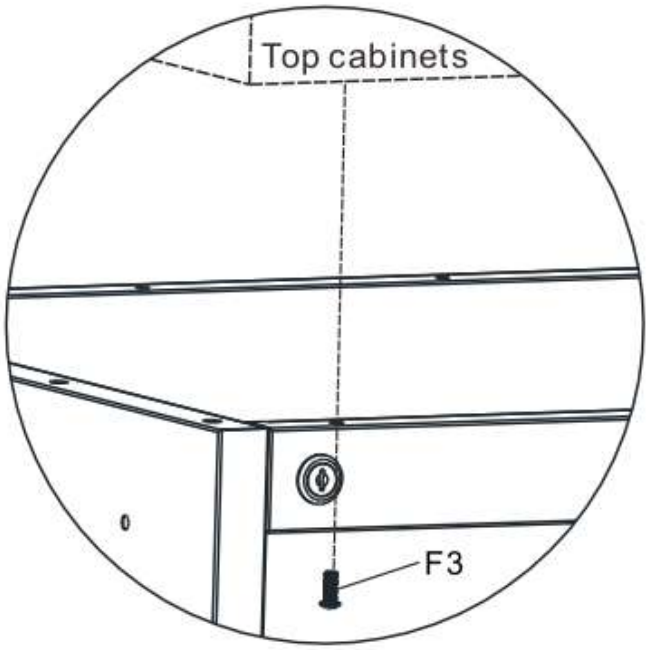

Drawer disassembly steps

Step 1

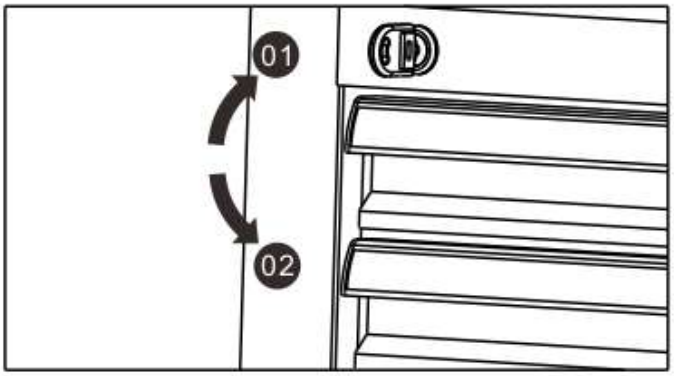

01 Turn to unlock.

02 Turn to lock.

⚠ Keys are easy to lose and break, please take care of them.

Step 2

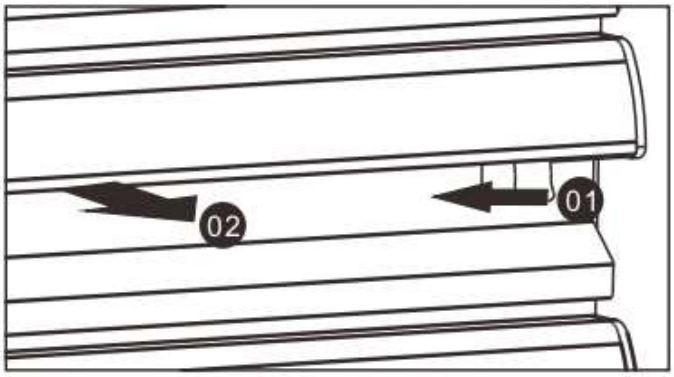

01 Slide lever to unlock.

02 Pull out the drawers.

⚠ The self-locking system might be damaged if you open drawers in locked state.

Step 3

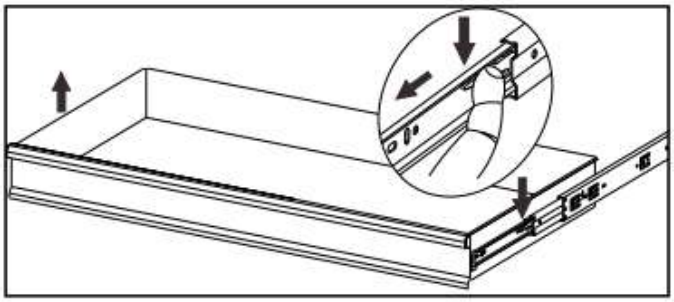

If you need to remove the drawer, please pull the drawer all the way out, then push the plastic release lever of the ball bearing slide up on one side and down on the other side, and then pull the drawer completely out

Step 4

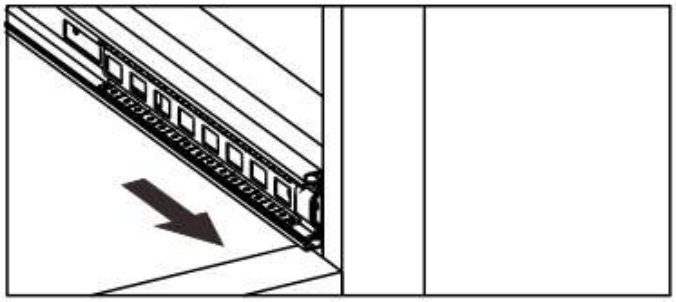

To place the drawer back, simply push the ball bearing cart all the way to the end of the slides (on both sides), and align the slide runners on the drawer with the slide tracks on the unit. Push it carefully inside until it stops.

Note: If they do not go smoothly please take out and repeat step.

VALSUR

2 Doors Base Cabinet

Assembly Instruction

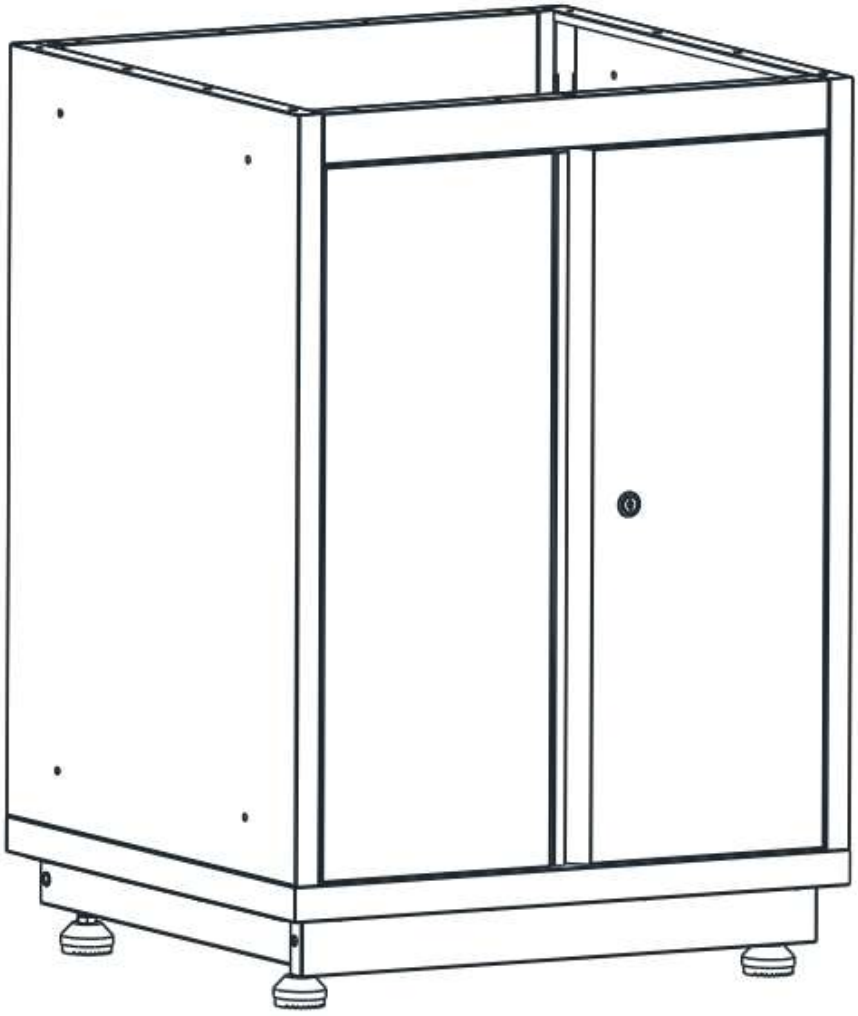

30BC242N1

THIS INSTRUCTION BOOKLET CONTAINS IMPORTANT SAFETY INFORMATION.
PLEASE READ AND KEEP FOR FUTURE REFERENCE.

SAFETY

Your safety and the safety of others are very important.

We have provided many important safety messages in this manual and on your product. Always read and obey all safety messages.

⚠ CAUTION Please take safety precautions when using the cabinet.

- Do not step or climb on worktop.
- Do not let children near the cabinet.
- Make sure floor is leveled and flat when using the cabinet.
- Two or more people require to move and assemble cabinet.

CARE

1. Wash the cabinet with a mild detergent and warm water. Do not allow water to remain on the cabinet for any length of time.
2. Use a soft and clean cloth that will not scratch the surface when dusting.
3. Liquid spills should be removed immediately. Using a soft clean cloth, blot the spill gently, Avoid rubbing.
4. Check bolts/screws periodically and tighten them if necessary.

PARTS

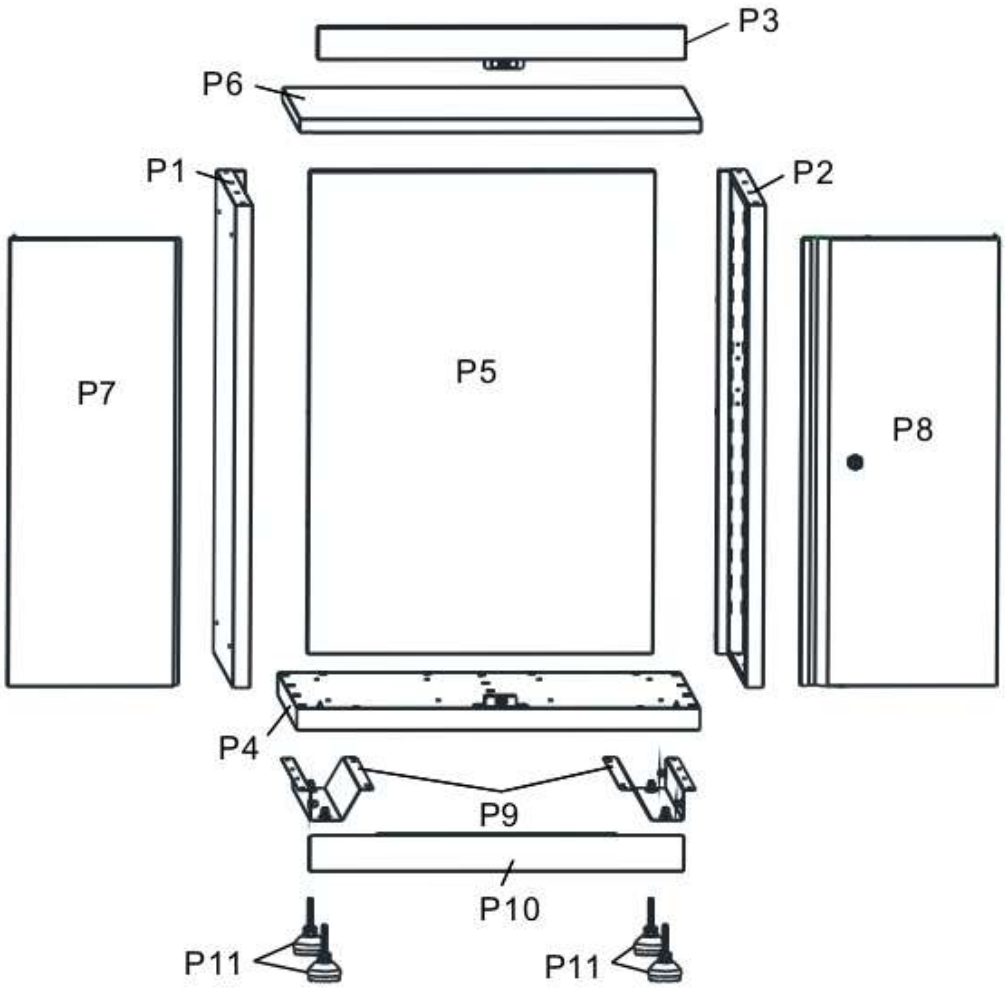

F1
(4PCS)

F2
(4PCS)

F3 M6
(40PCS)

F4 M8
(8PCS)

F7 M5
(8PCS)

ASSEMBLY INSTRUCTIONS

INSTRUCTIONS

> Intended for use in a garage.
> Maximum weight limit is 130 kg UDL for each shelf.
> Maximum weight limit is 550kg UDL for the cabinet.

ASSEMBLE STEPS

Step 1

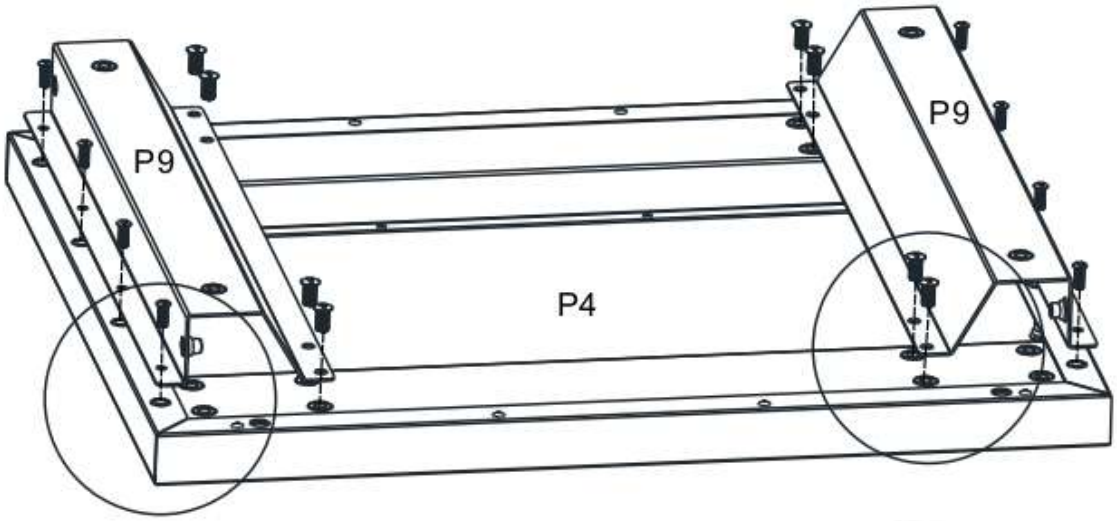

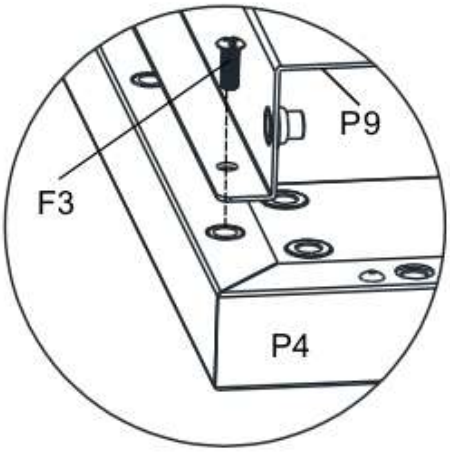

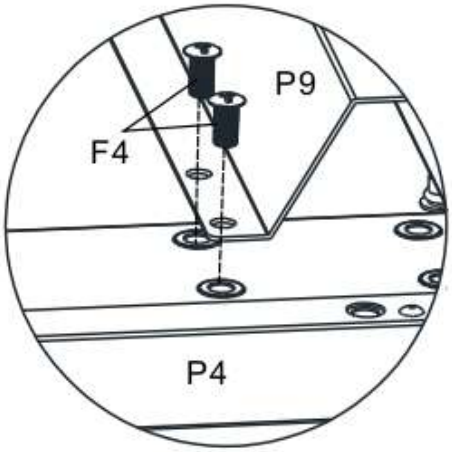

Step 2

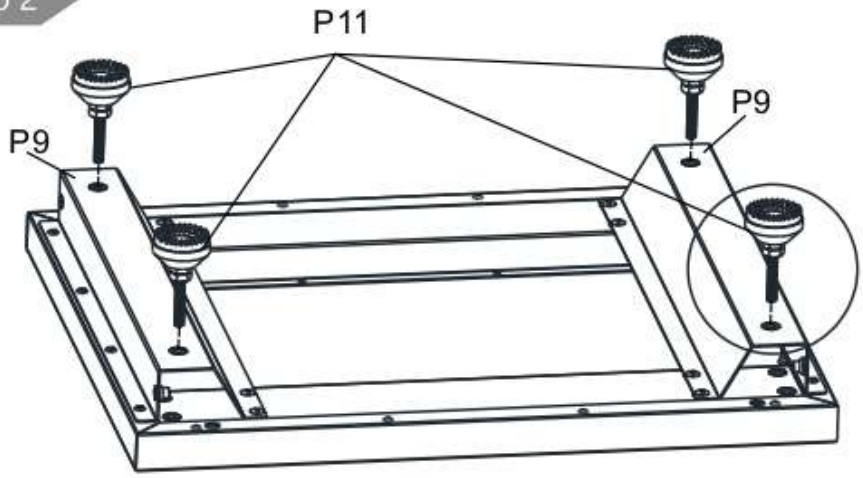

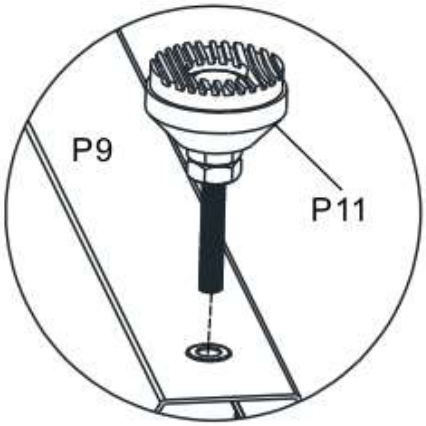

Step 3

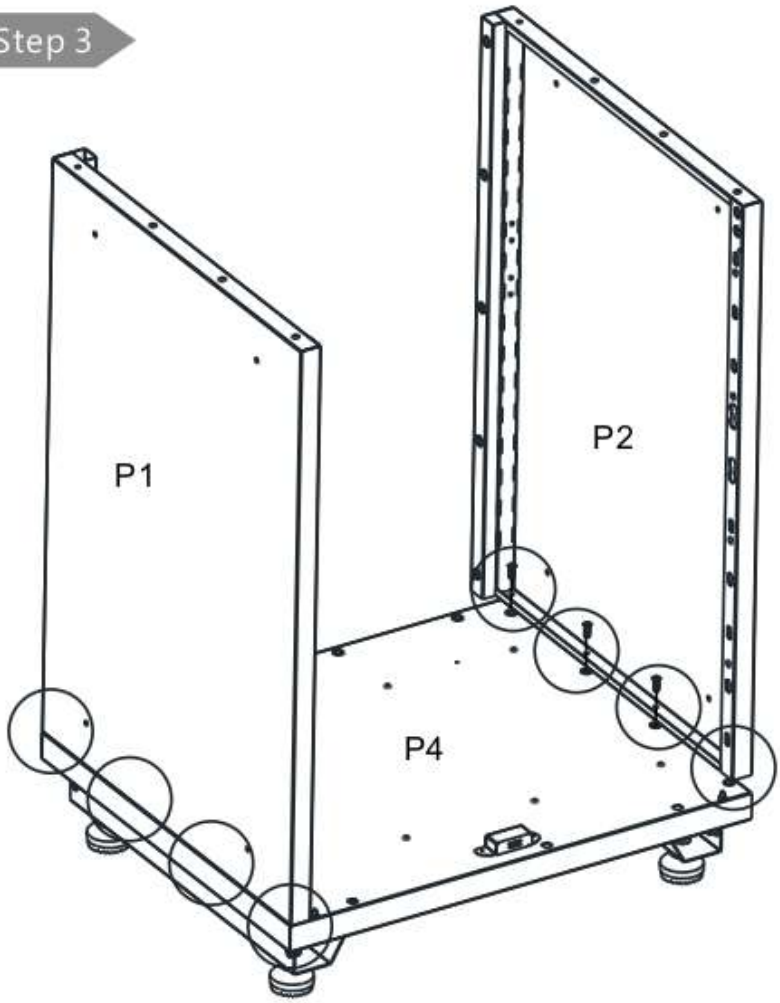

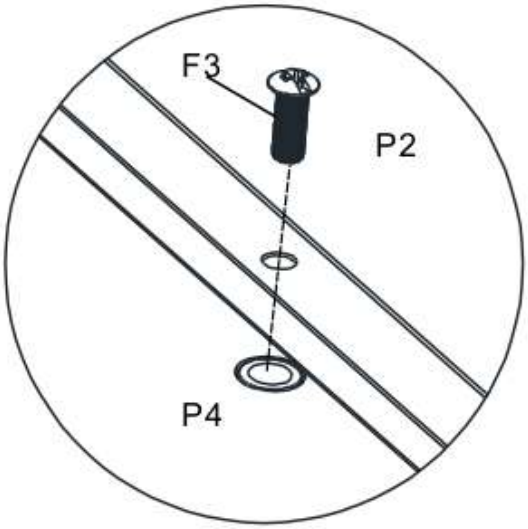

Step 4

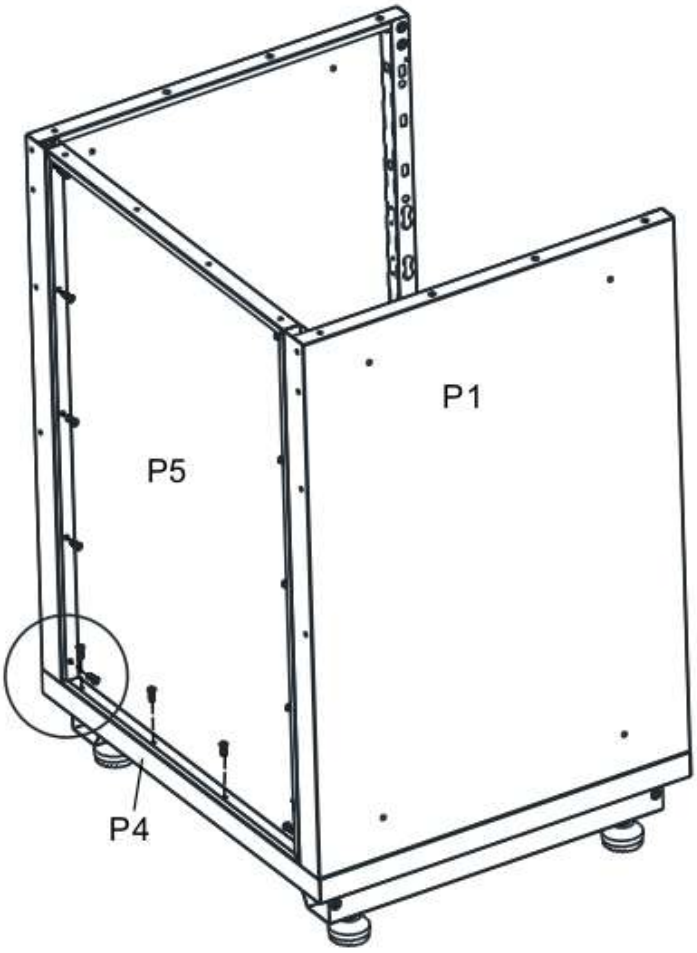

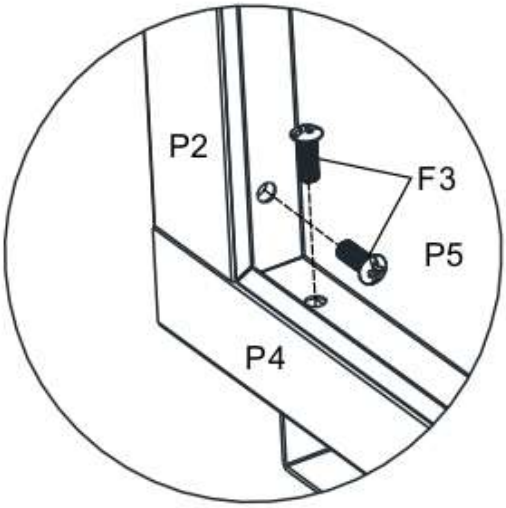

Step 5

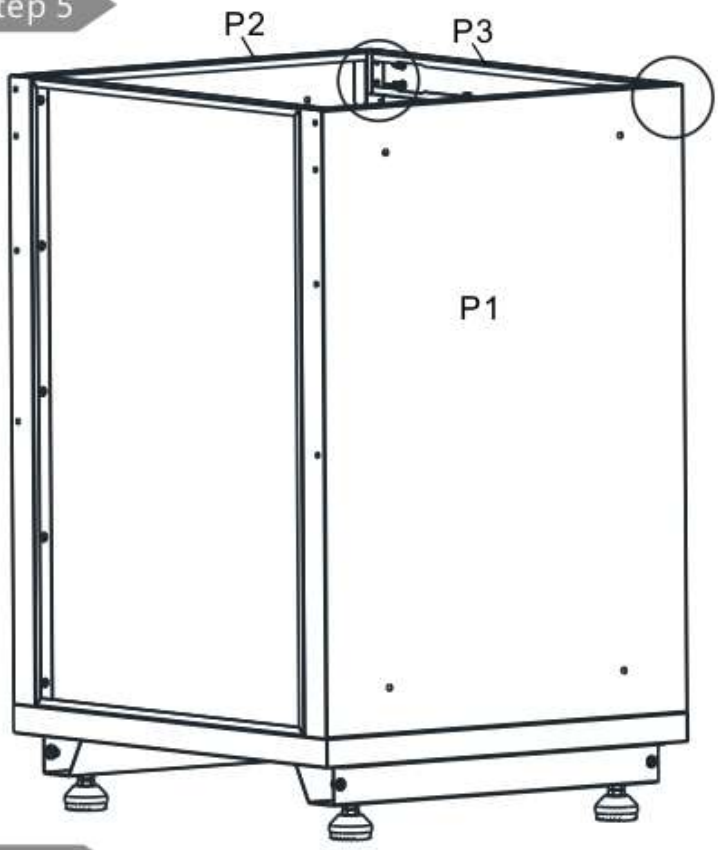

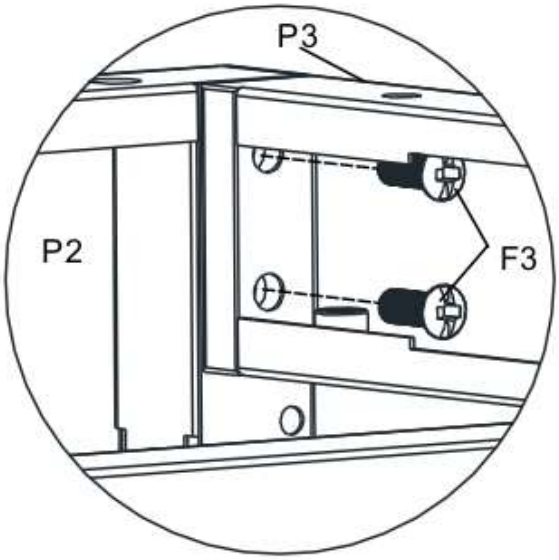

Step 6

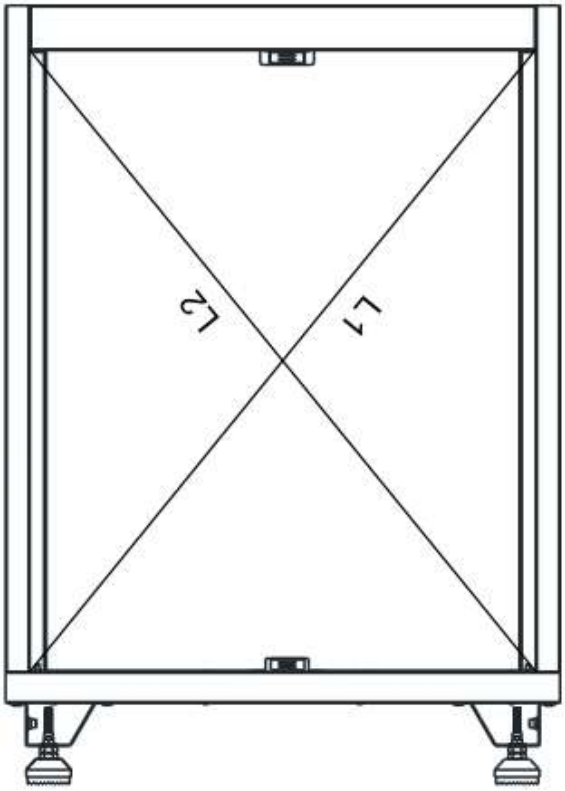

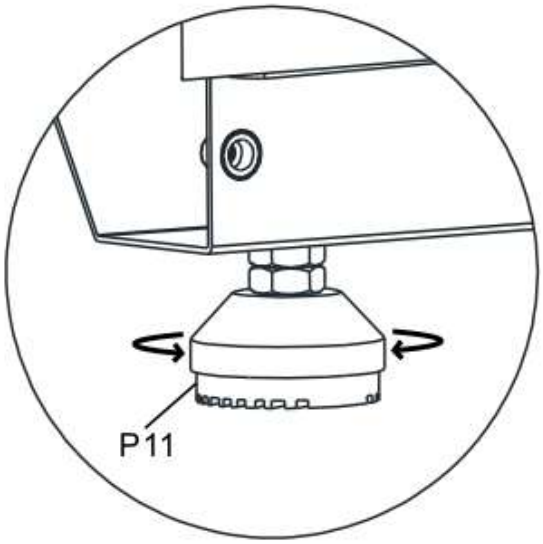

Notes that if the ground is slightly not level, you can adjust by rotating P11 to make the cabinet level stable and easy to connect the rack.

⚠ Length:L1=L2

Square the cabinet frame. Make sure the measurements from corner to corner should be equal distance before completely tighten the bolts.

Step 7

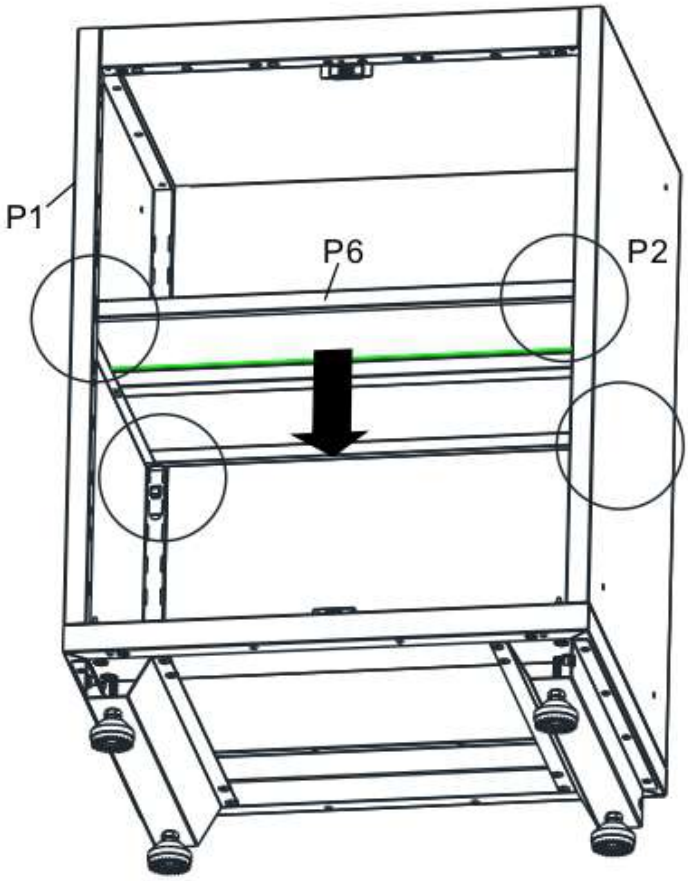

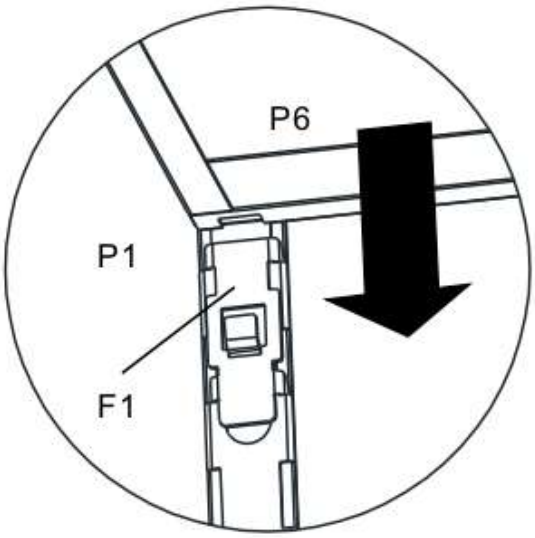

Step 8

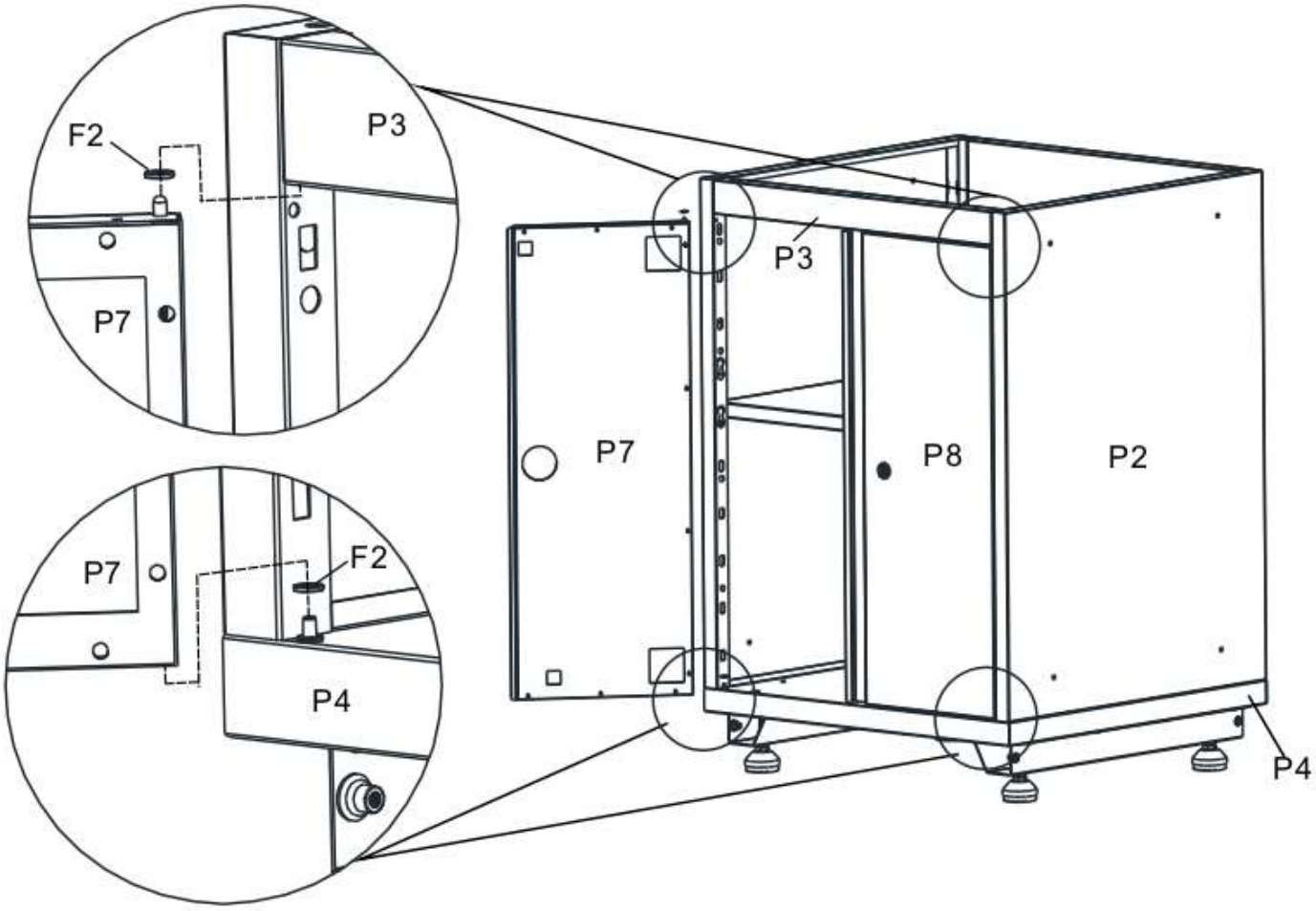

Step 9

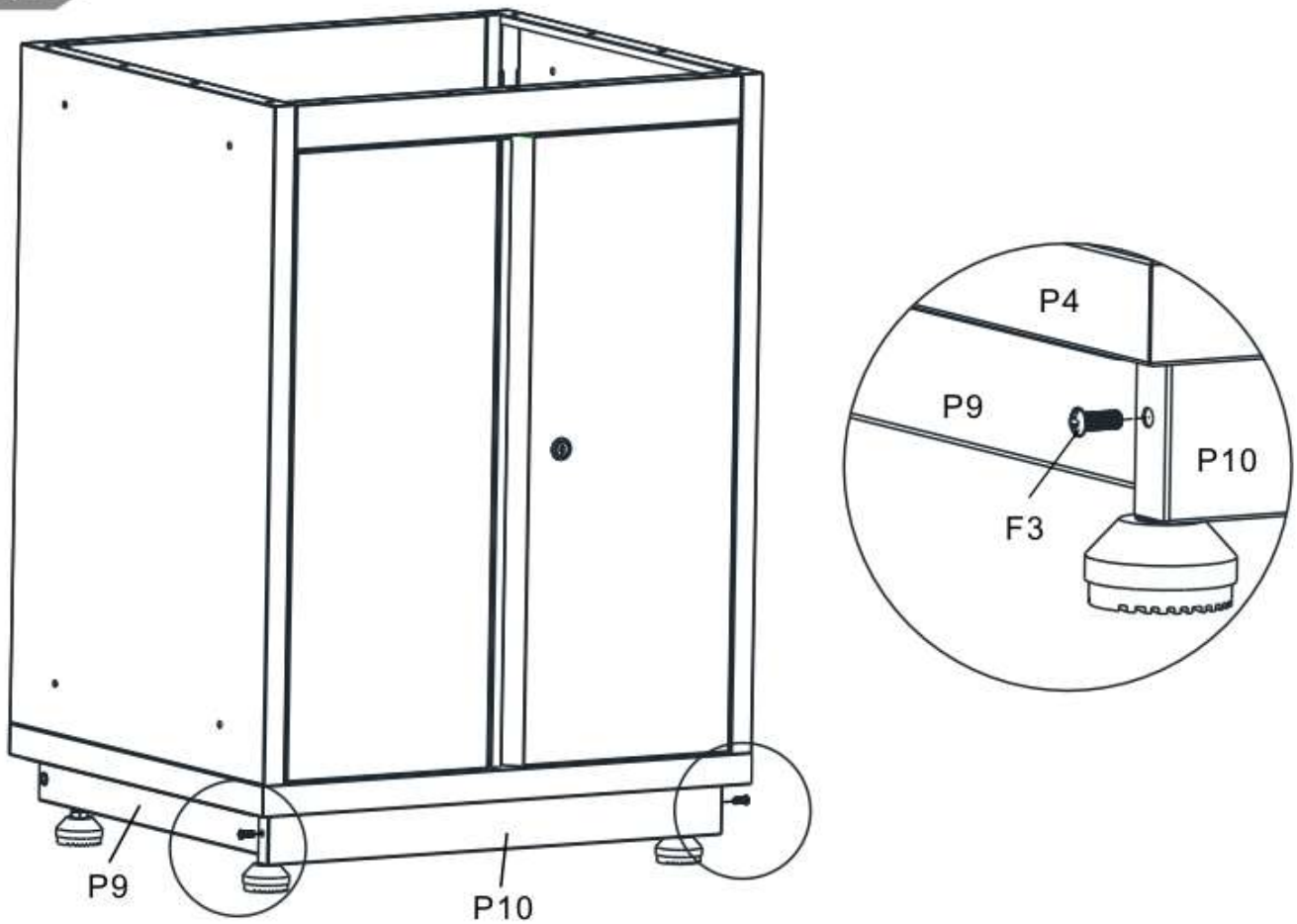

Attention: If this unit connected with other cabinet with racks (30SA01), please connect racks first, then place it in an appropriate position and complete the remaining steps.

Finish

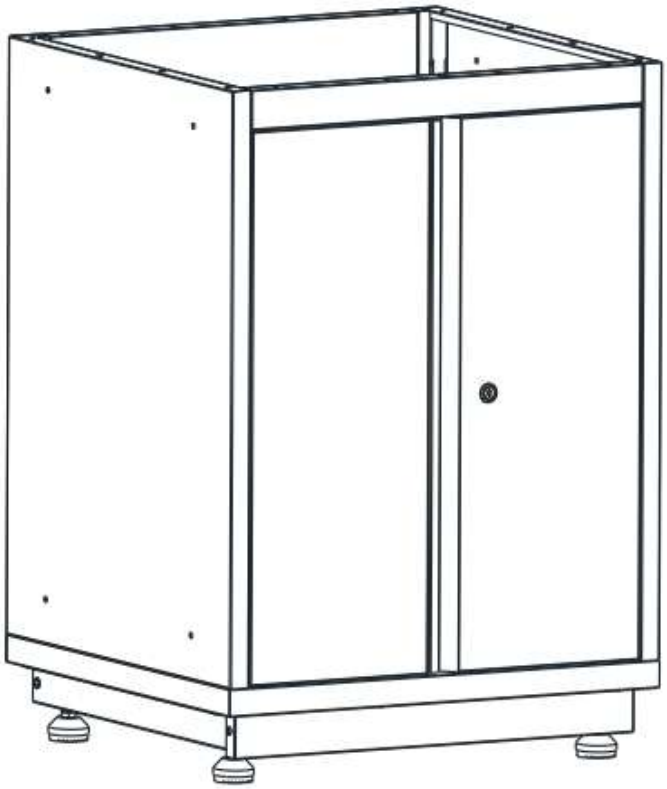

ASSEMBLY STEPS OF WORKTOP/ TOP CABINET

1.Connect with the worktop(sold separately),please refer to the following figure from Step 6.

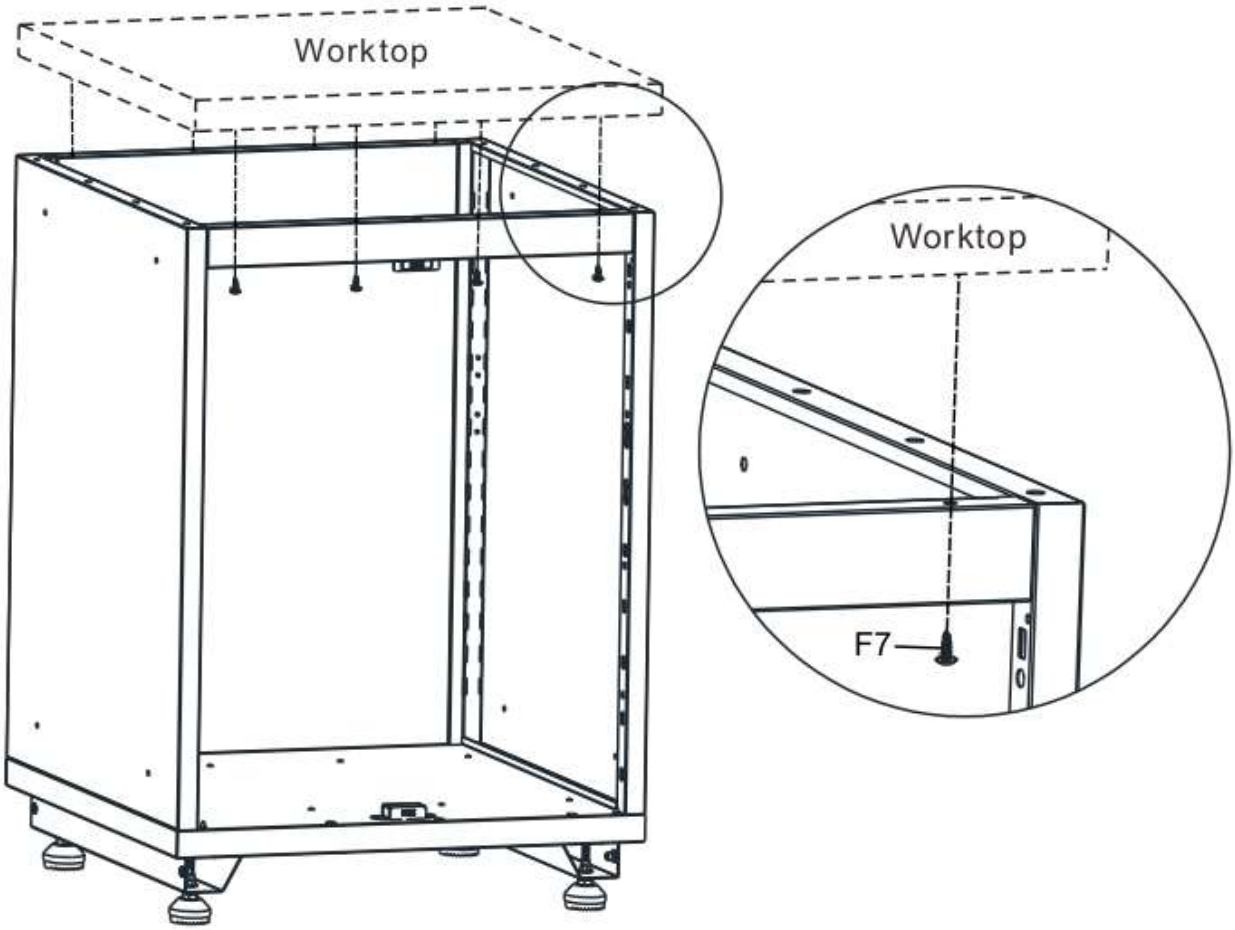

2.Connect with the top cabinet(sold separately),please refer to the following figure from Step 6

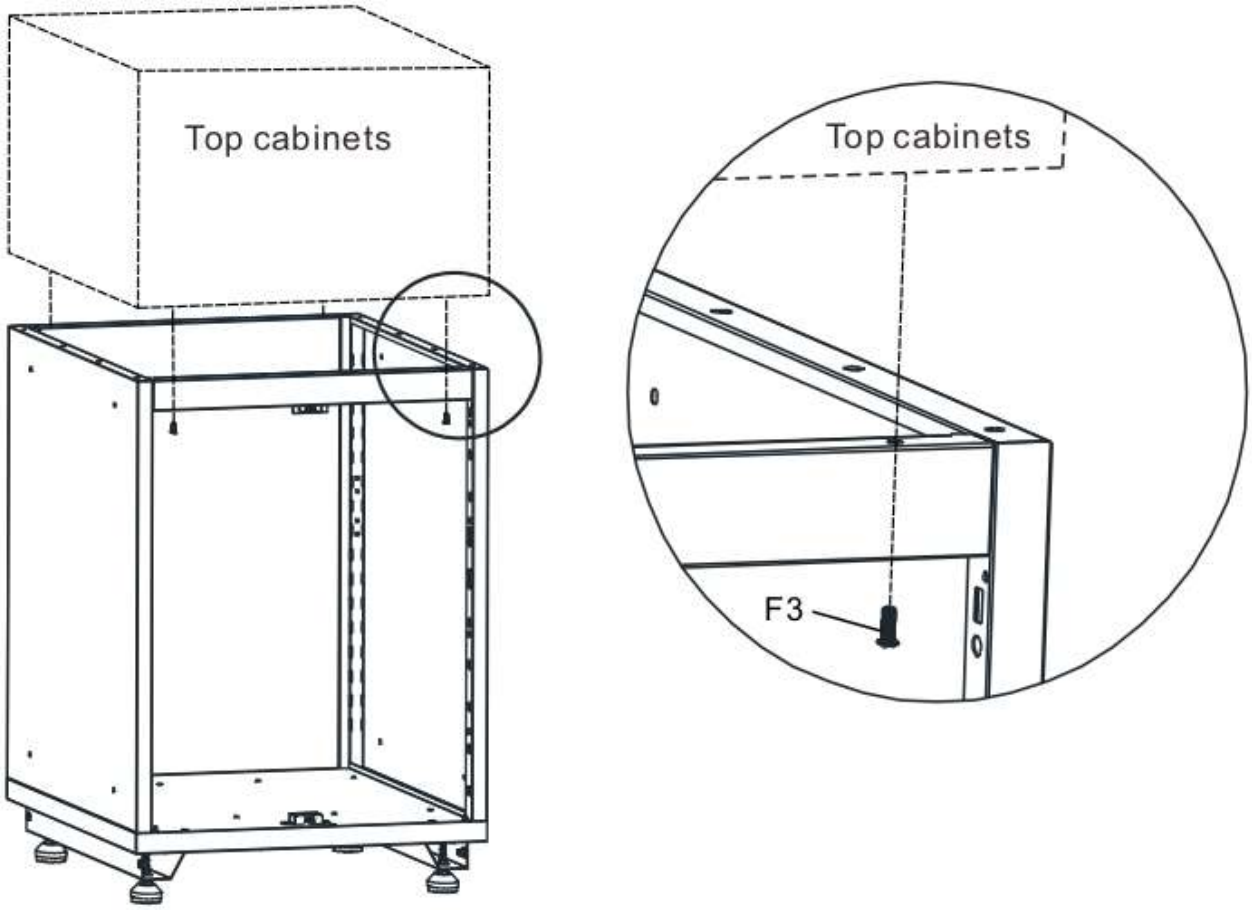

VALSUR

5 Drawers Roller Cabinet

Assembly Instruction

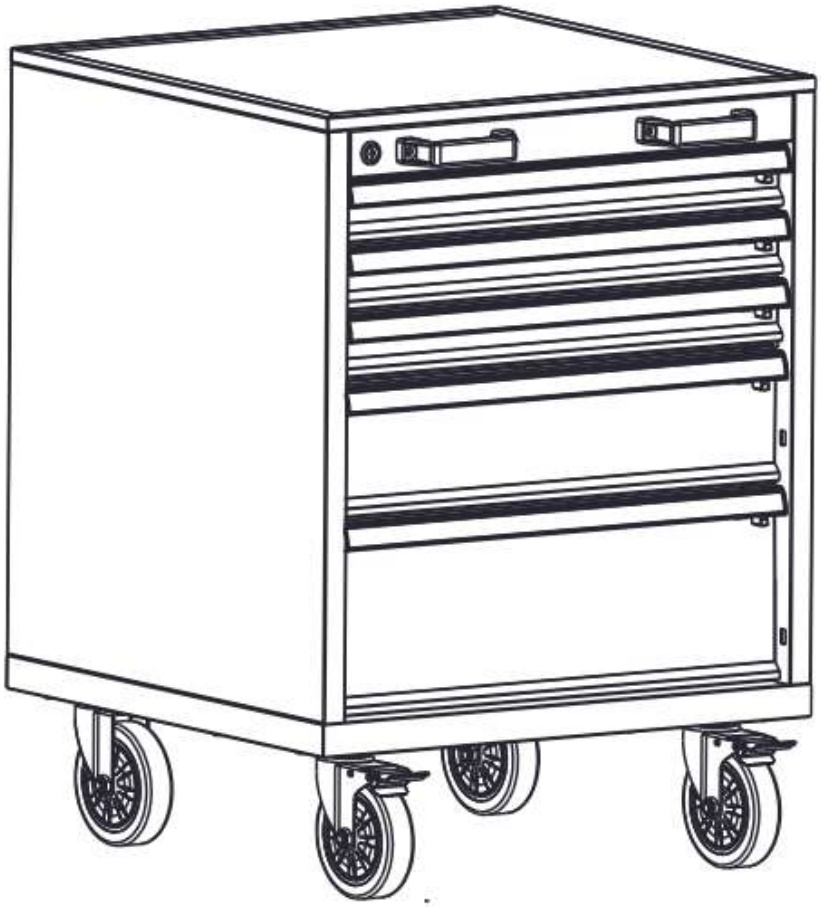

30RC248E5

THIS INSTRUCTION BOOKLET CONTAINS IMPORTANT SAFETY INFORMATION.
PLEASE READ AND KEEP FOR FUTURE REFERENCE.

SAFETY

Your safety and the safety of others are very important.

We have provided many important safety messages in this manual and on your appliance. Always read and obey all safety messages.

⚠ CAUTION Please take safety precautions when using the cabinet.

- Do not open more than one drawer at a time, lock drawers before moving the chest.
- Do not step or climb on worktop, do not let children near the cabinet.
- Make sure floor is leveled and flat when using the cabinet.
- Two or more people require to move and assemble cabinet.
- Set the brake on locking casters unless you are moving the tool chest.
- New drawer glides may be stiff and difficult to open when first expanding the glide. A gently outward pull should release the safety catch that is built into the glide to prevent drawer opening while moving the tool chest.

CARE

1. Wash the cabinet with a mild detergent and warm water. Do not allow water to remain on the cabinet for any length of time.
2. Use a soft and clean cloth that will not scratch the surface when dusting.
3. Liquid spills should be removed immediately. Using a soft clean cloth, blot the spill gently. Avoid rubbing.
4. Check bolts/screws periodically and tighten them if necessary.
5. Please do not load the maximum load during use.
6. Do not scratch the surface of the worktable with sharp objects.

PARTS

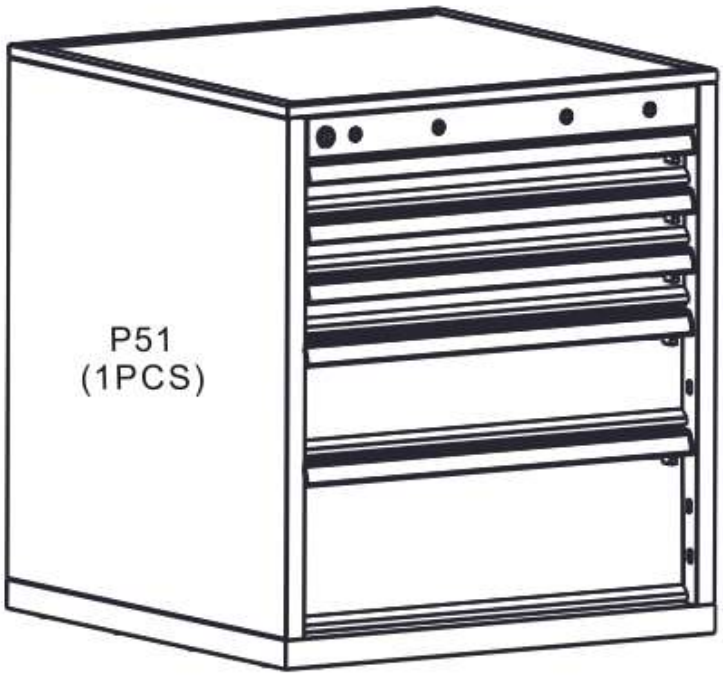

F3 M6
(4PCS)

F13
(2PCS)

F14
(2PCS)

F12 M8
(16PCS)

F15
(2PCS)

F17
(16PCS)

F18
(16PCS)

MAXIMUM RECOMMENDED WEIGHT LOADS

> Intended for use in a garage
> Maximum weight limit is 240 kg UDL each for the cabinet.

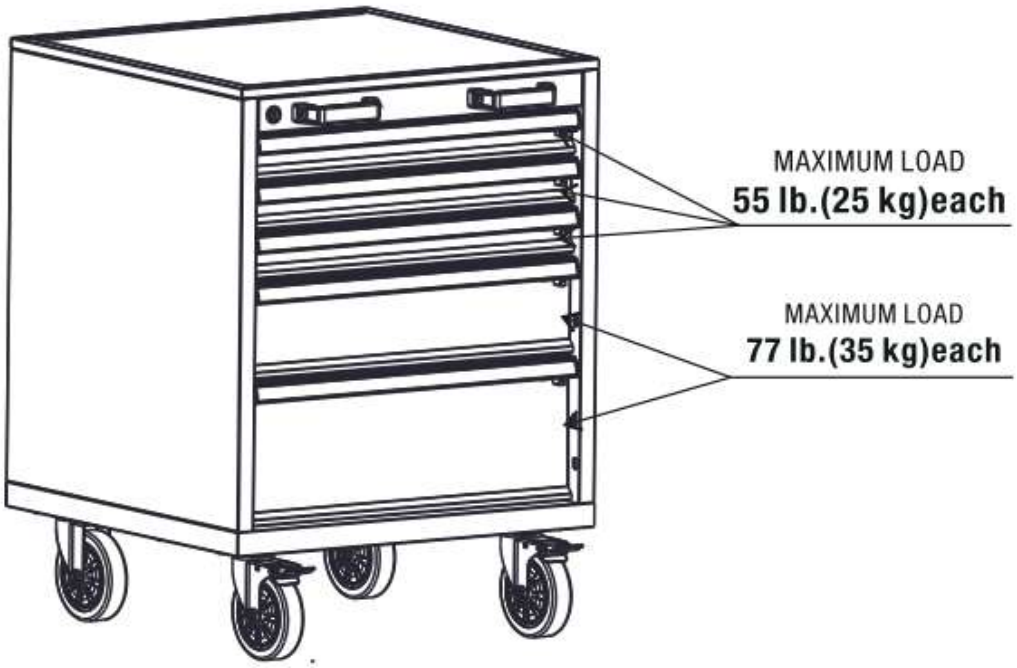

ASSEMBLY INSTRUCTIONS

ASSEMBLY STEPS

Step 1

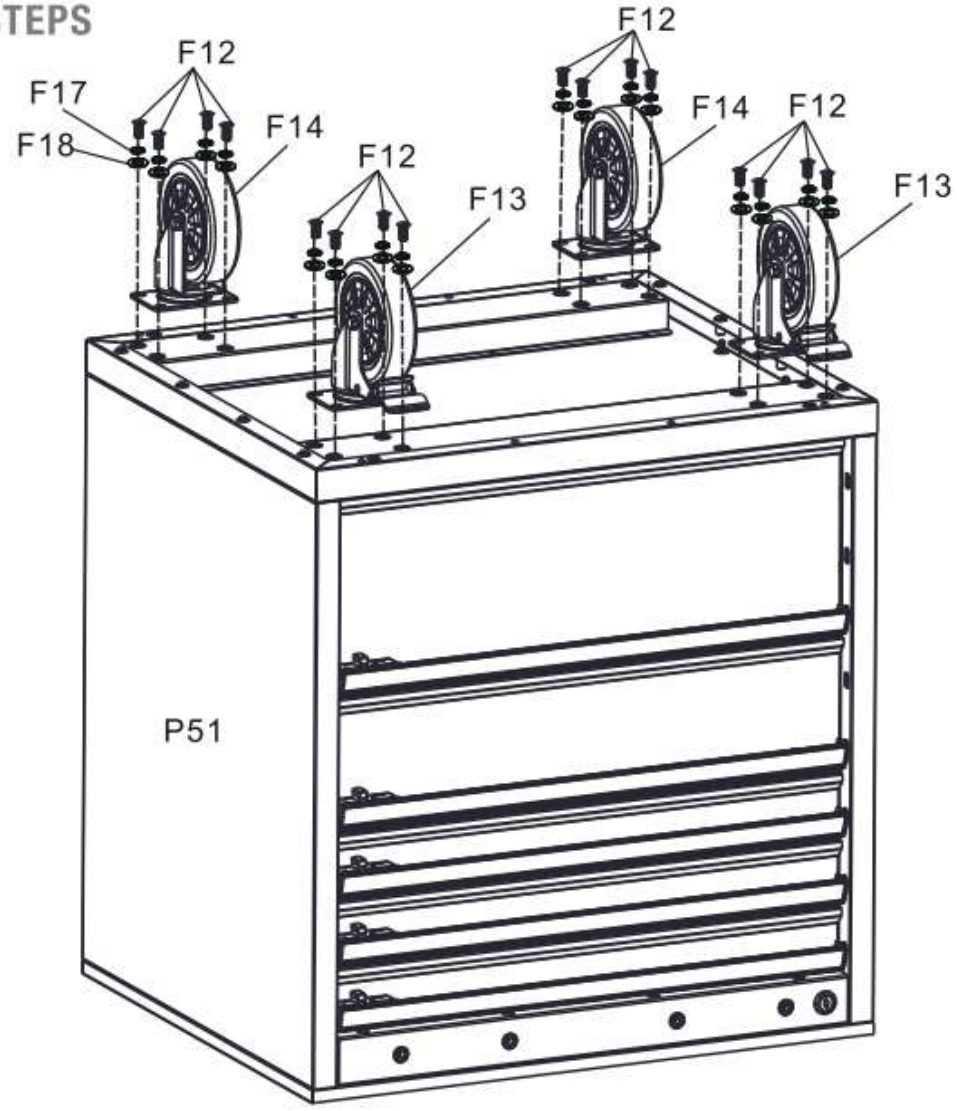

Step 2

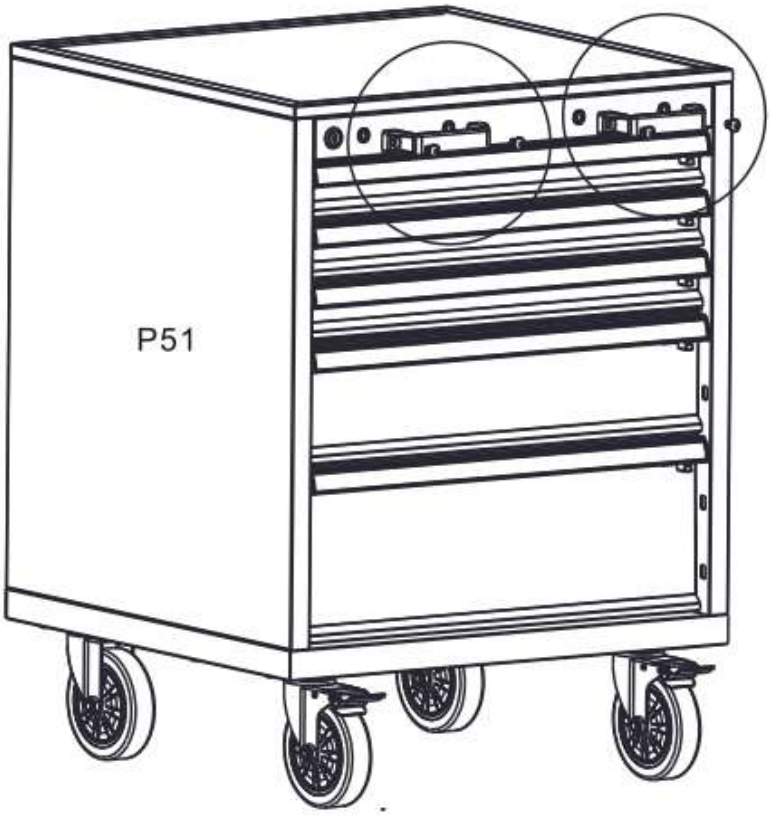

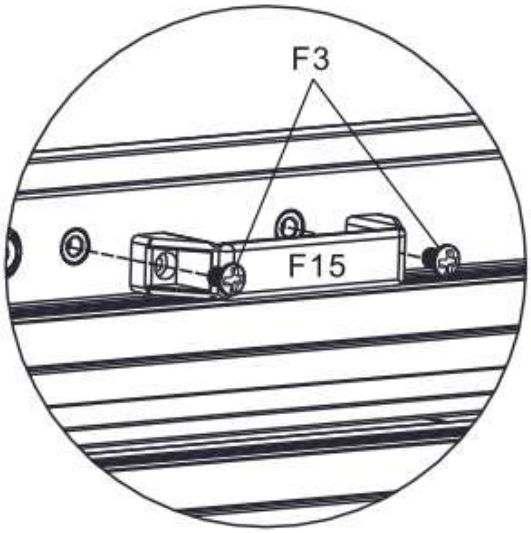

Finish

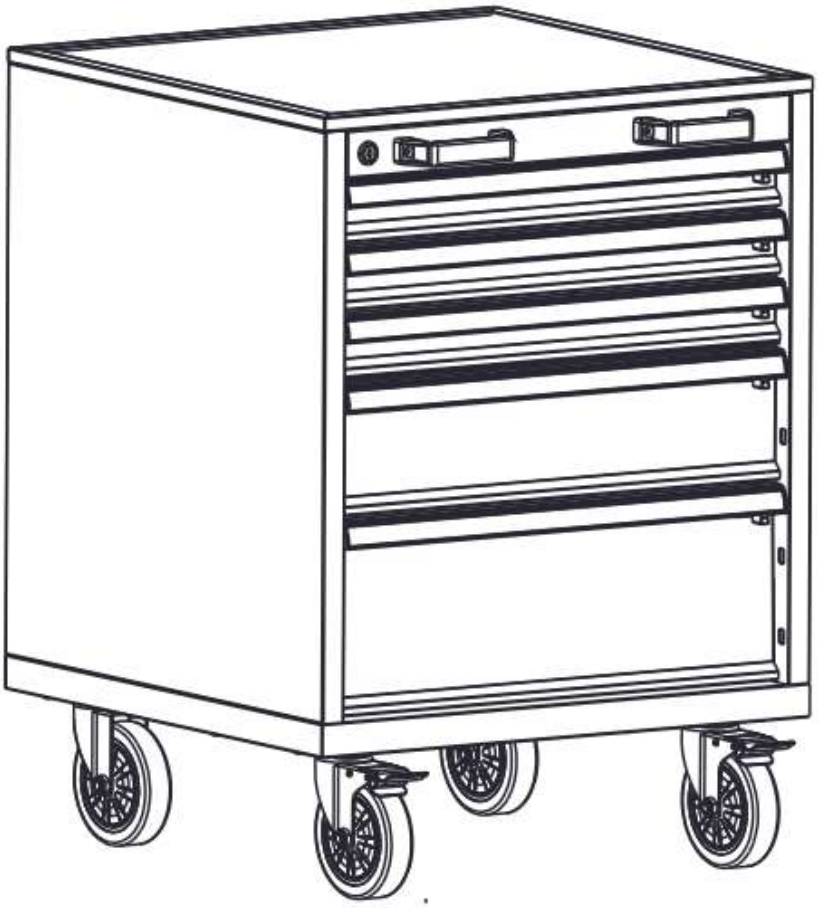

Drawer disassembly steps

Step 1

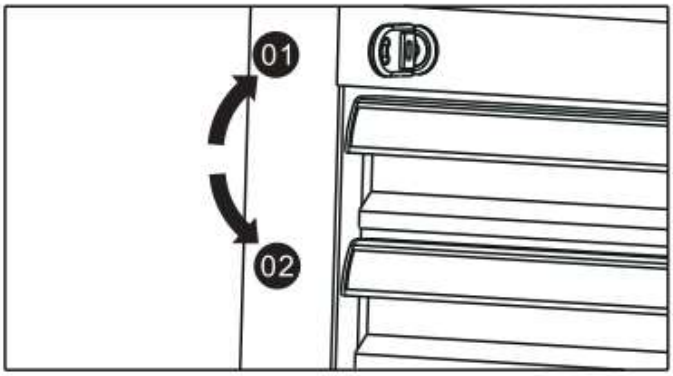

01 Turn to unlock.

02 Turn to lock.

⚠ Keys are easy to lose and break, please take care of them.

Step 2

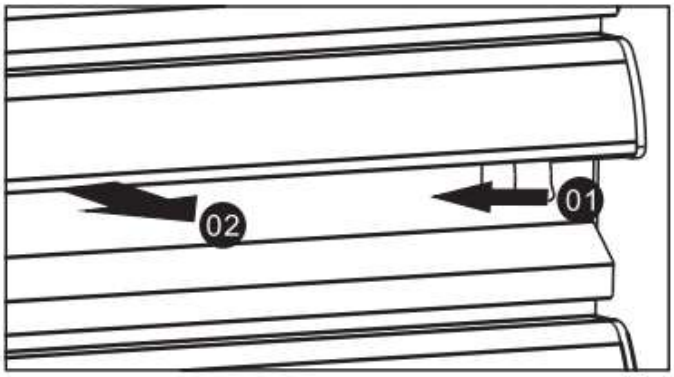

01 Slide lever to unlock.

02 Pull out the drawers.

⚠ The self-locking system might be damaged if you open drawers in locked state.

Step 3

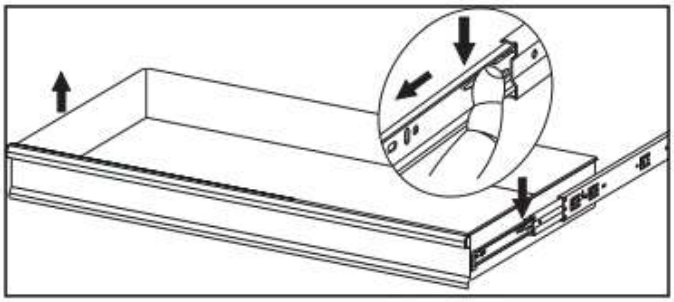

If you need to remove the drawer, please pull the drawer all the way out, then push the plastic release lever of the ball bearing slide up on one side and down on the other side, and then pull the drawer completely out

Step 4

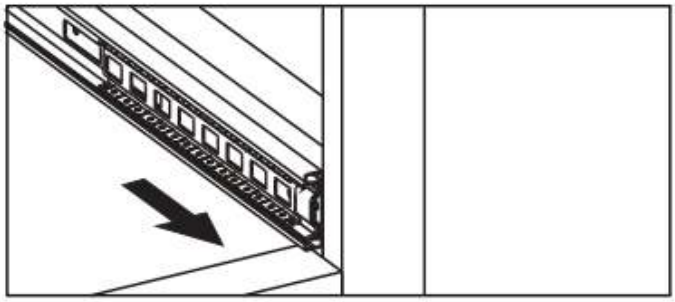

To place the drawer back, simply push the ball bearing cart all the way to the end of the slides (on both sides), and align the slide runners on the drawer with the slide tracks on the unit. Push it carefully inside until it stops.

Note: If they do not go smoothly please take out and repeat step.

VALSUR

2 Doors Large Cabinet

Assembly Instruction

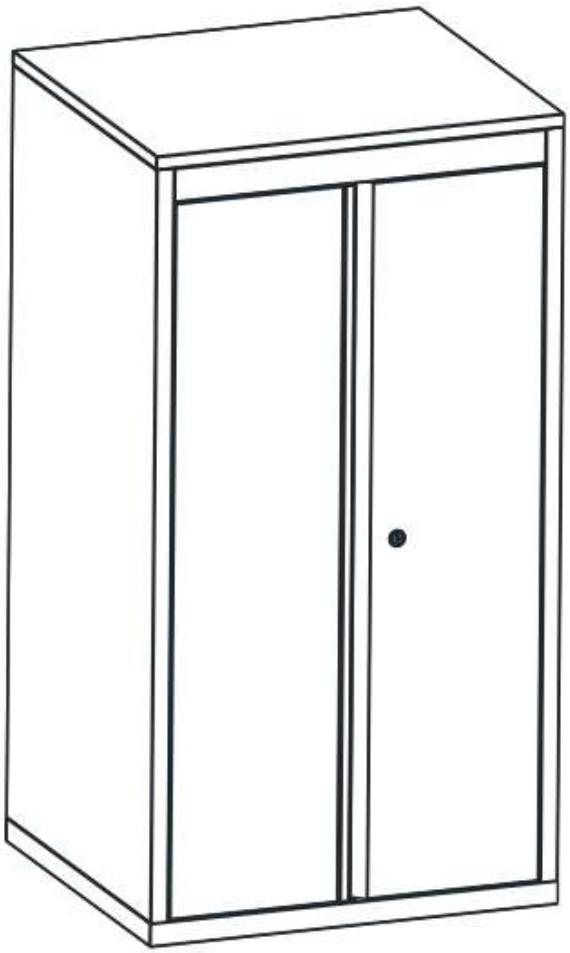

30TC242M2

THIS INSTRUCTION BOOKLET CONTAINS IMPORTANT SAFETY INFORMATION.
PLEASE READ AND KEEP FOR FUTURE REFERENCE.

SAFETY

Your safety and the safety of others are very important.

We have provided many important safety messages in this manual and on your product. Always read and obey all safety messages.

⚠ CAUTION Please take safety precautions when using the cabinet.

- Do not step or climb on worktop.
- Do not let children near the cabinet.
- Make sure floor is leveled and flat when using the cabinet.
- Two or more people require to move and assemble cabinet.

CARE

1. Wash the cabinet with a mild detergent and warm water. Do not allow water to remain on the cabinet for any length of time.
2. Use a soft and clean cloth that will not scratch the surface when dusting.
3. Liquid spills should be removed immediately. Using a soft clean cloth, blot the spill gently, Avoid rubbing.
4. Check bolts/screws periodically and tighten them if necessary

PARTS

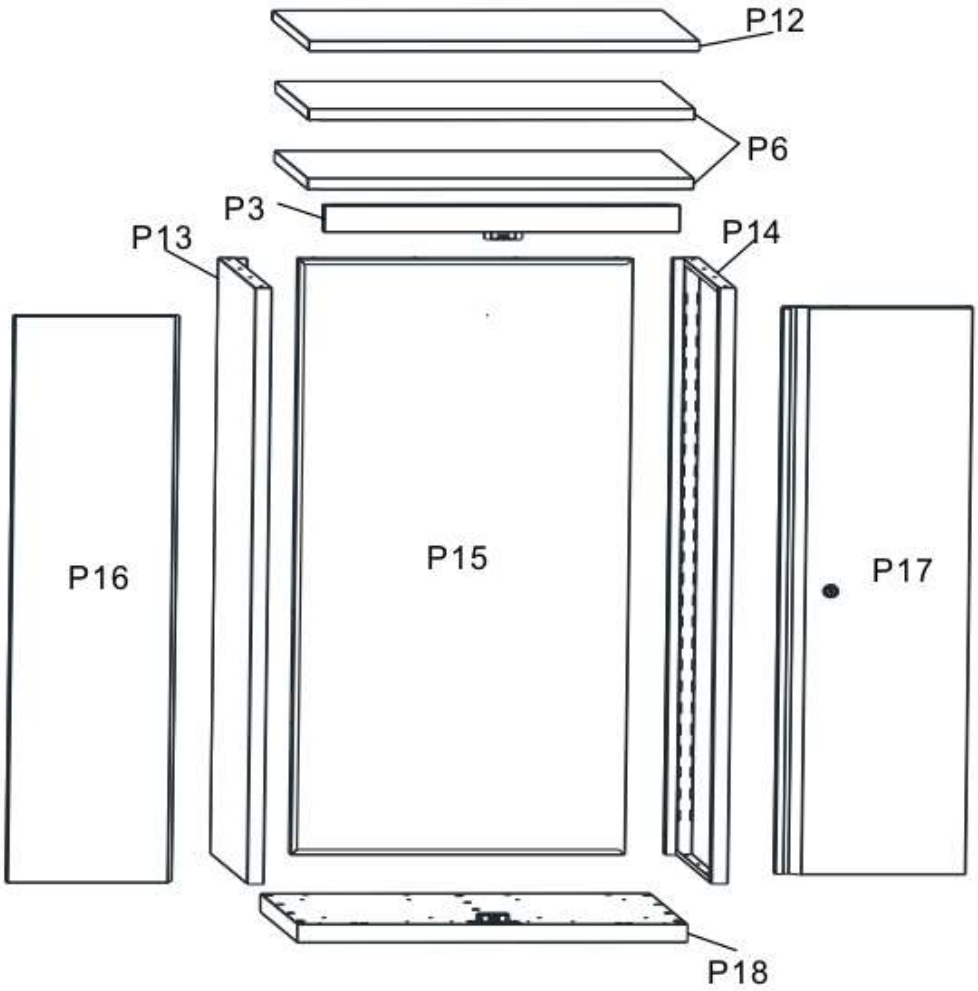

F1
(8PCS)

F2
(4PCS)

F3 M6
(48PCS)

ASSEMBLY INSTRUCTIONS

INSTRUCTIONS

> Intended for use in a garage.
> Maximum weight limit is 130kg UDL for each shelf.
> Maximum weight limit is 550kg UDL for the cabinet.

ASSEMBLE STEPS

Step 1

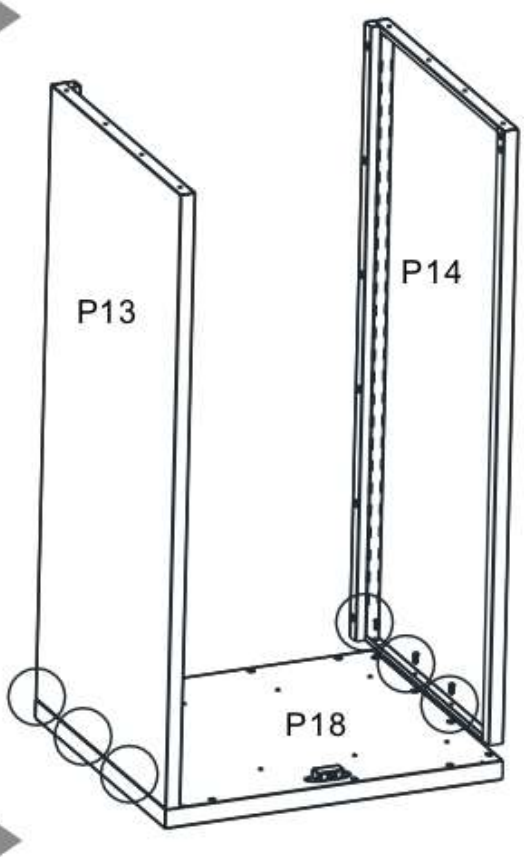

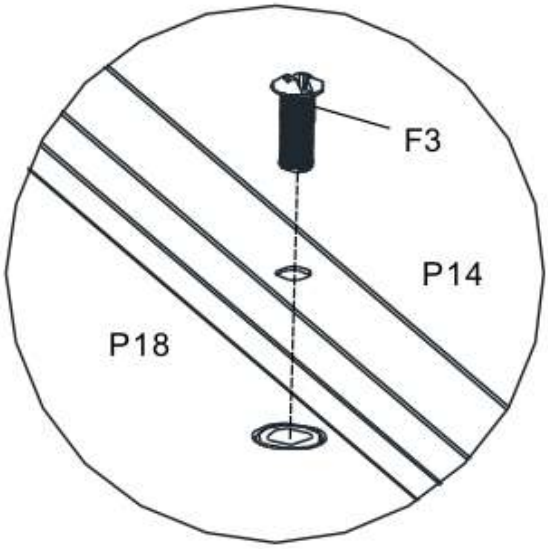

Step 2

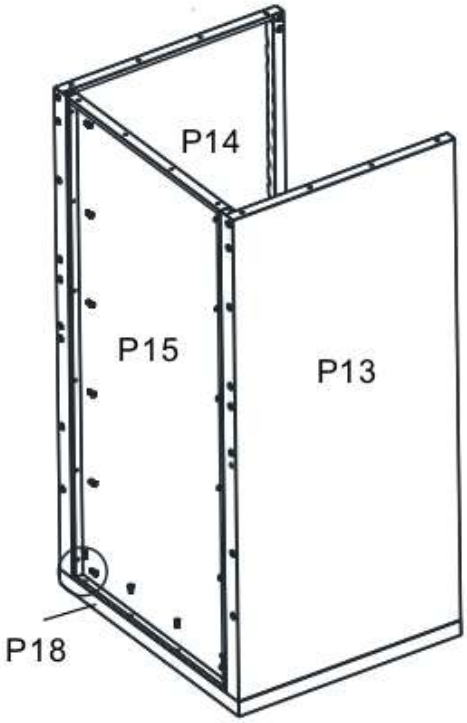

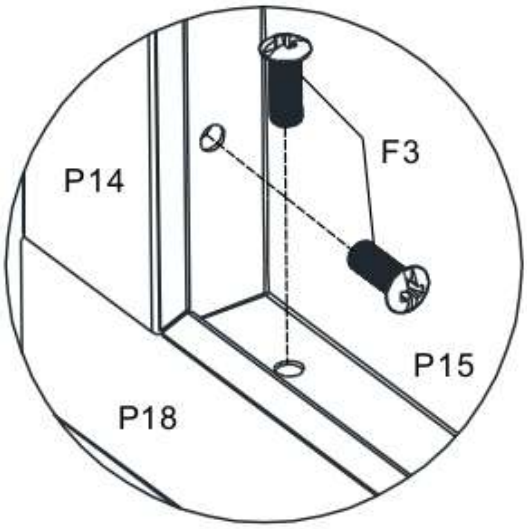

Step 3

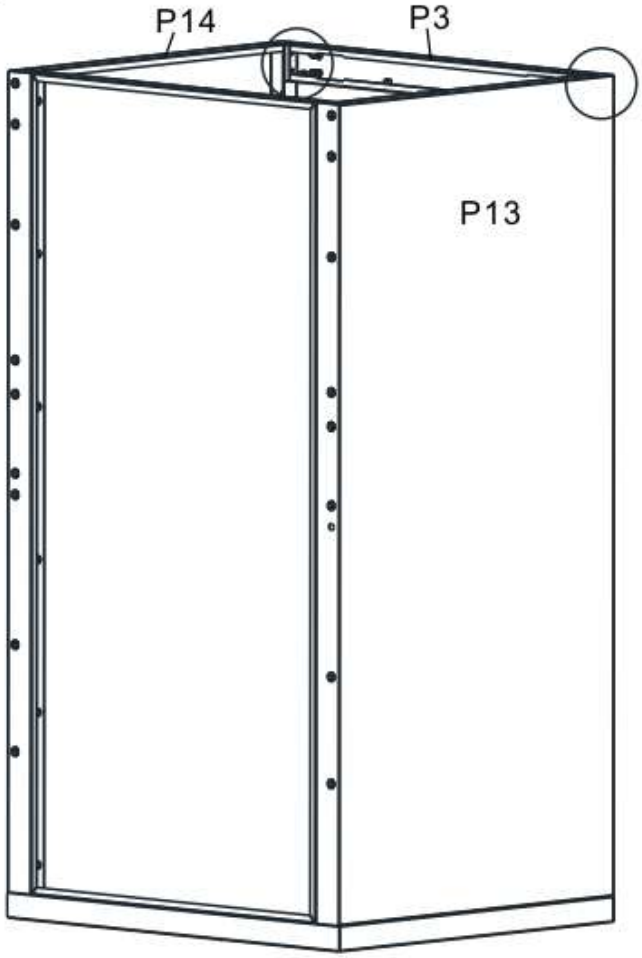

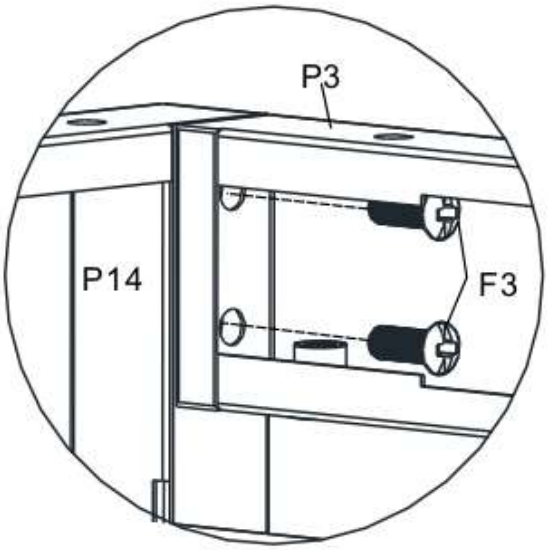

Step 4

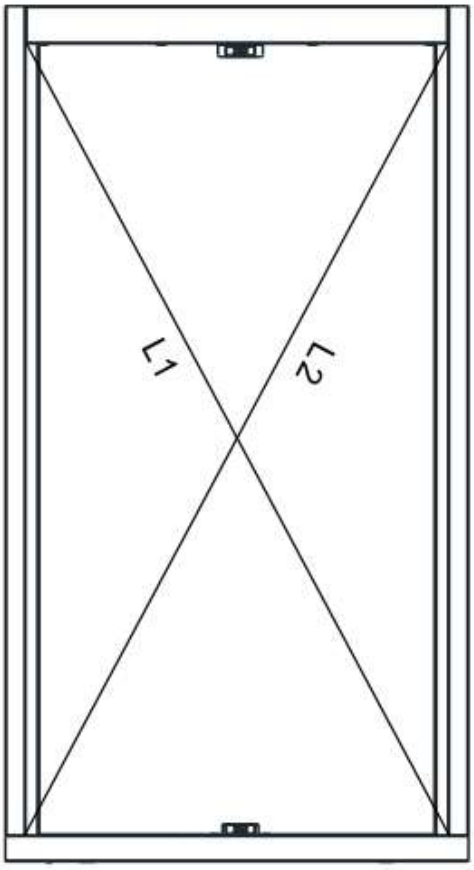

Length:L1=L2

Square the cabinet frame. Make sure the measurements from corner to corner should be equal distance before completely tightening the bolts.

Step 5

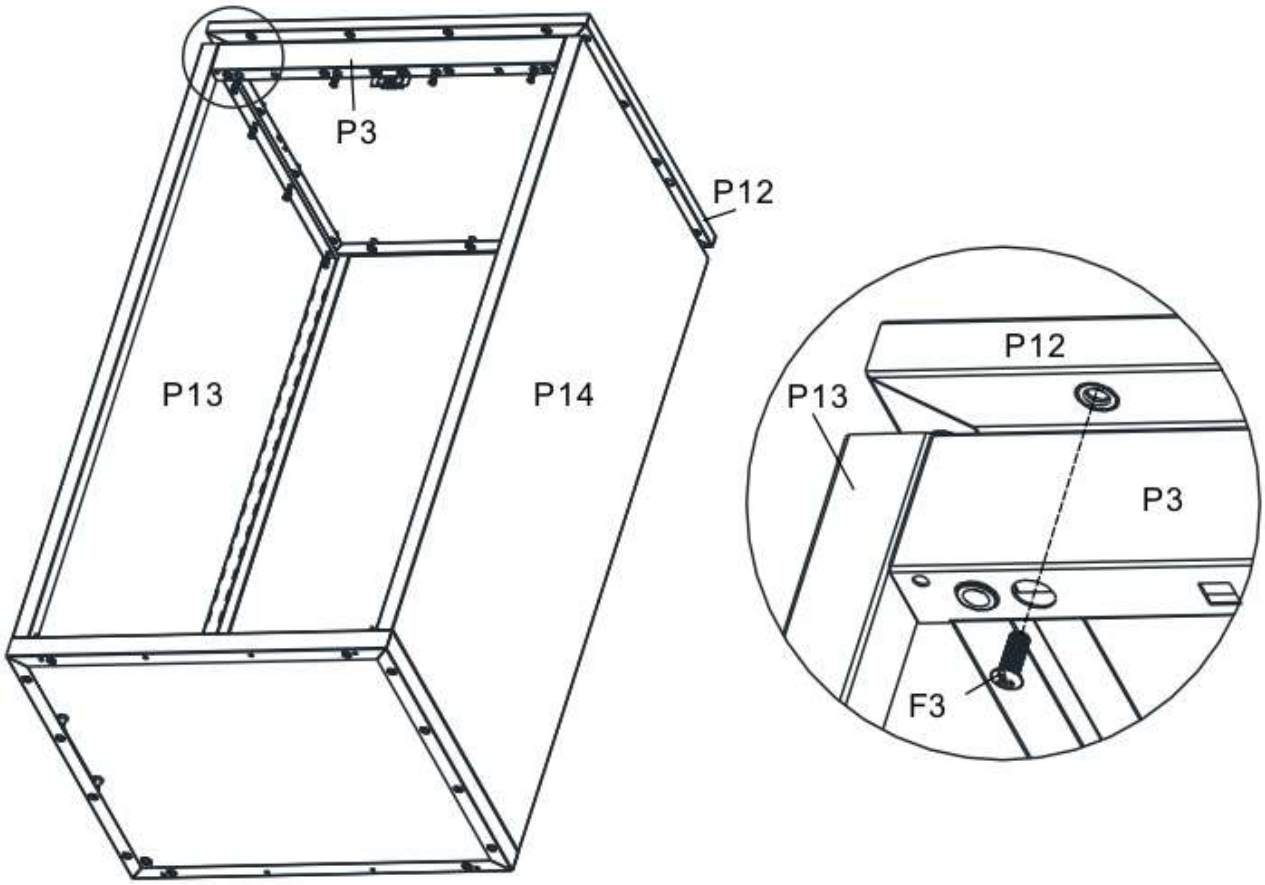

Step 6

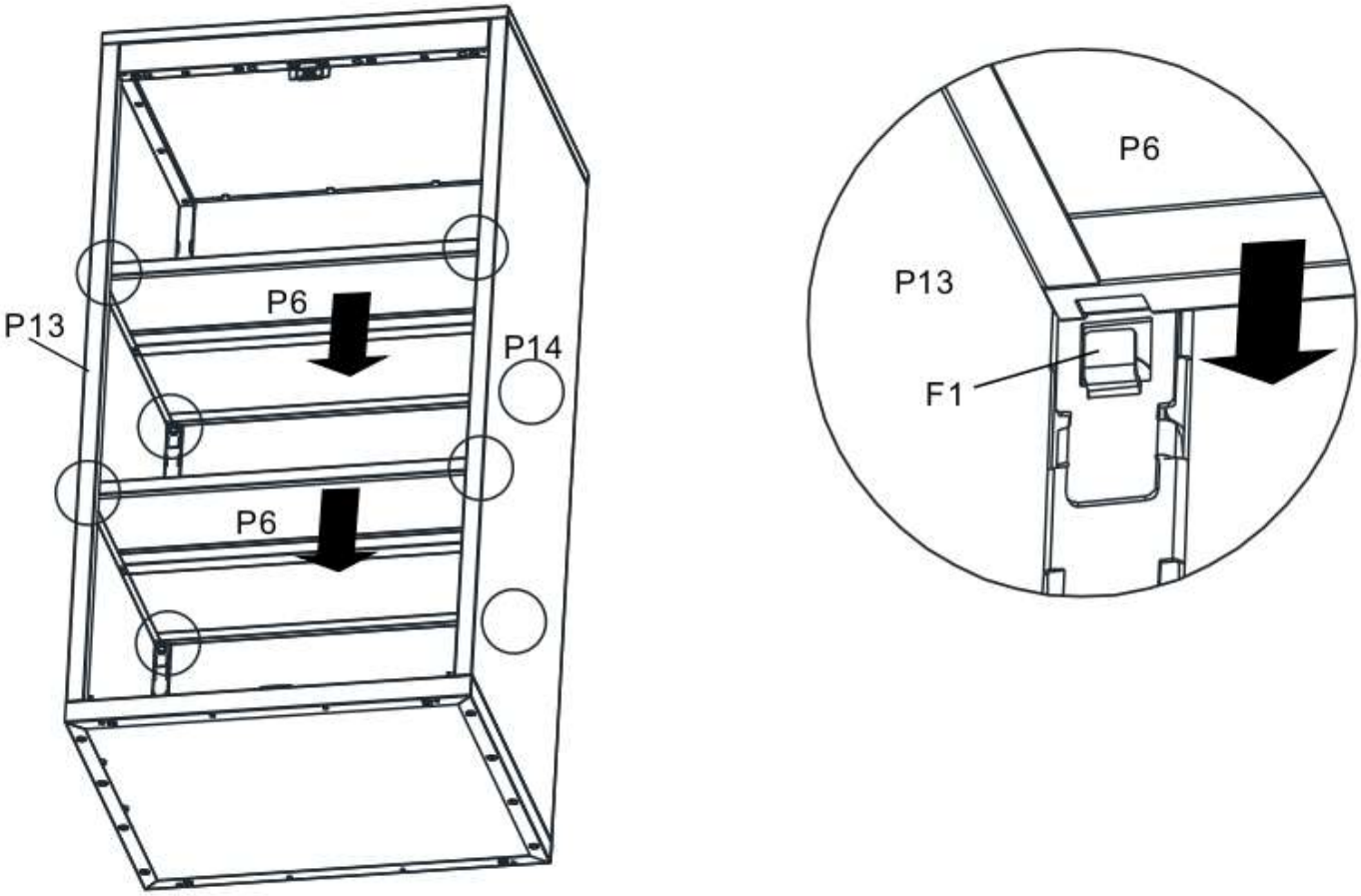

Step 7

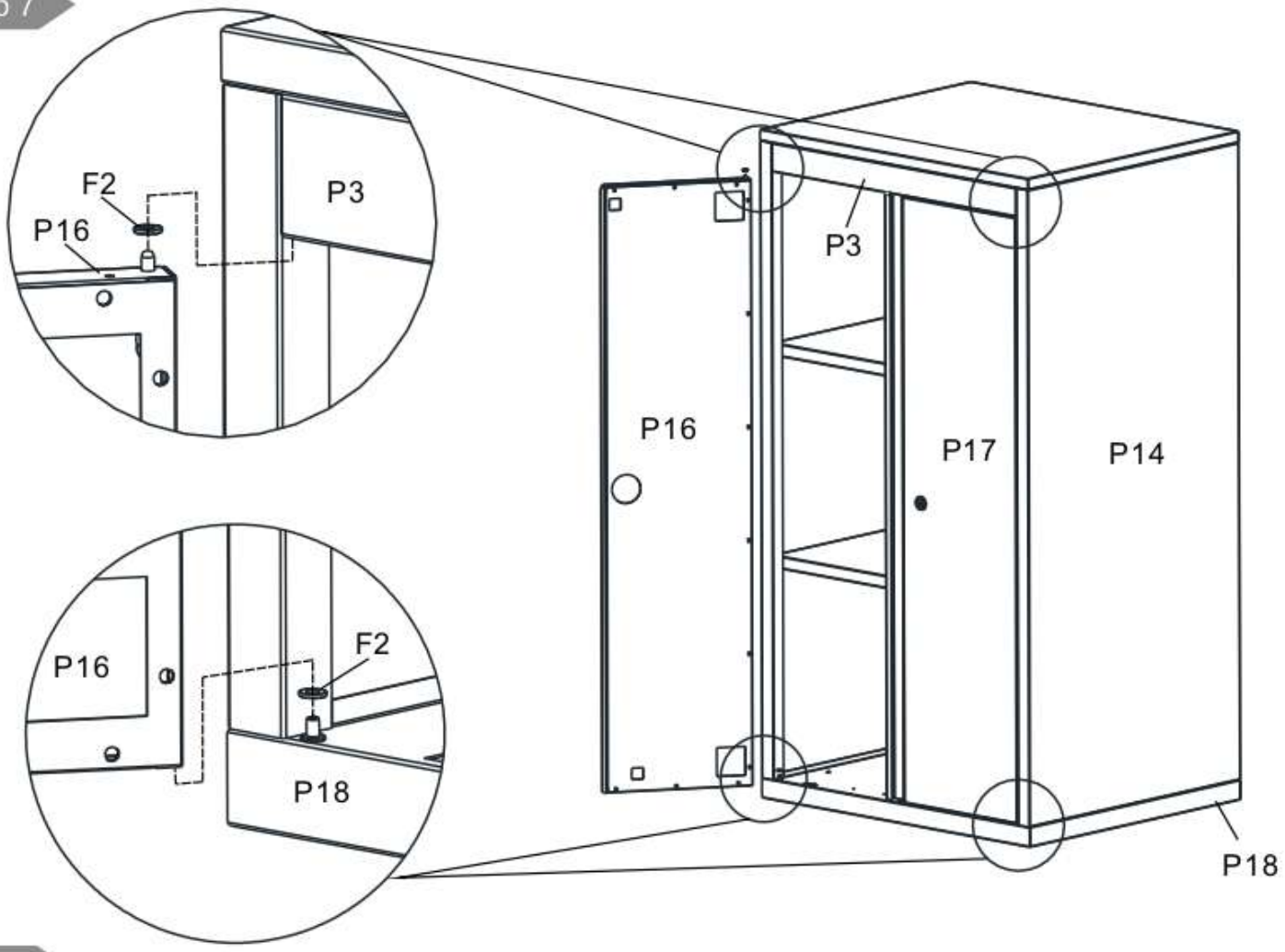

Finish

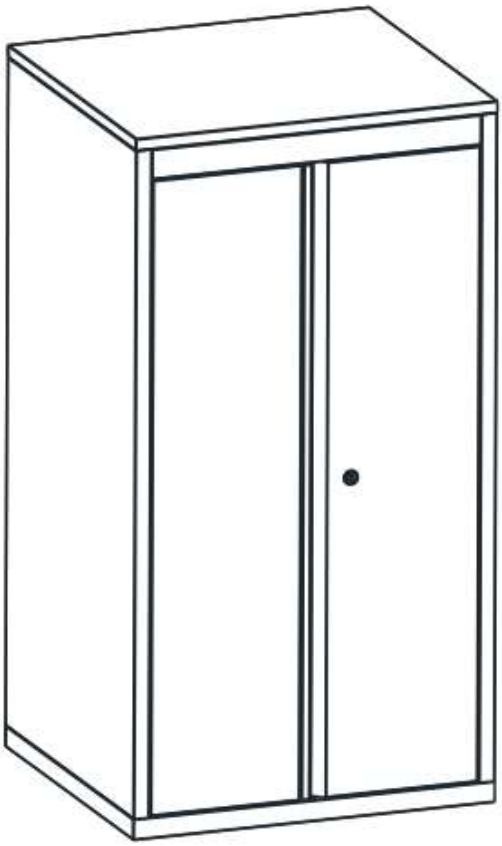

Assembly step of base cabinet

Connect with the base cabinet (sold separately),please refer to the following figure and related cabinetinstructions

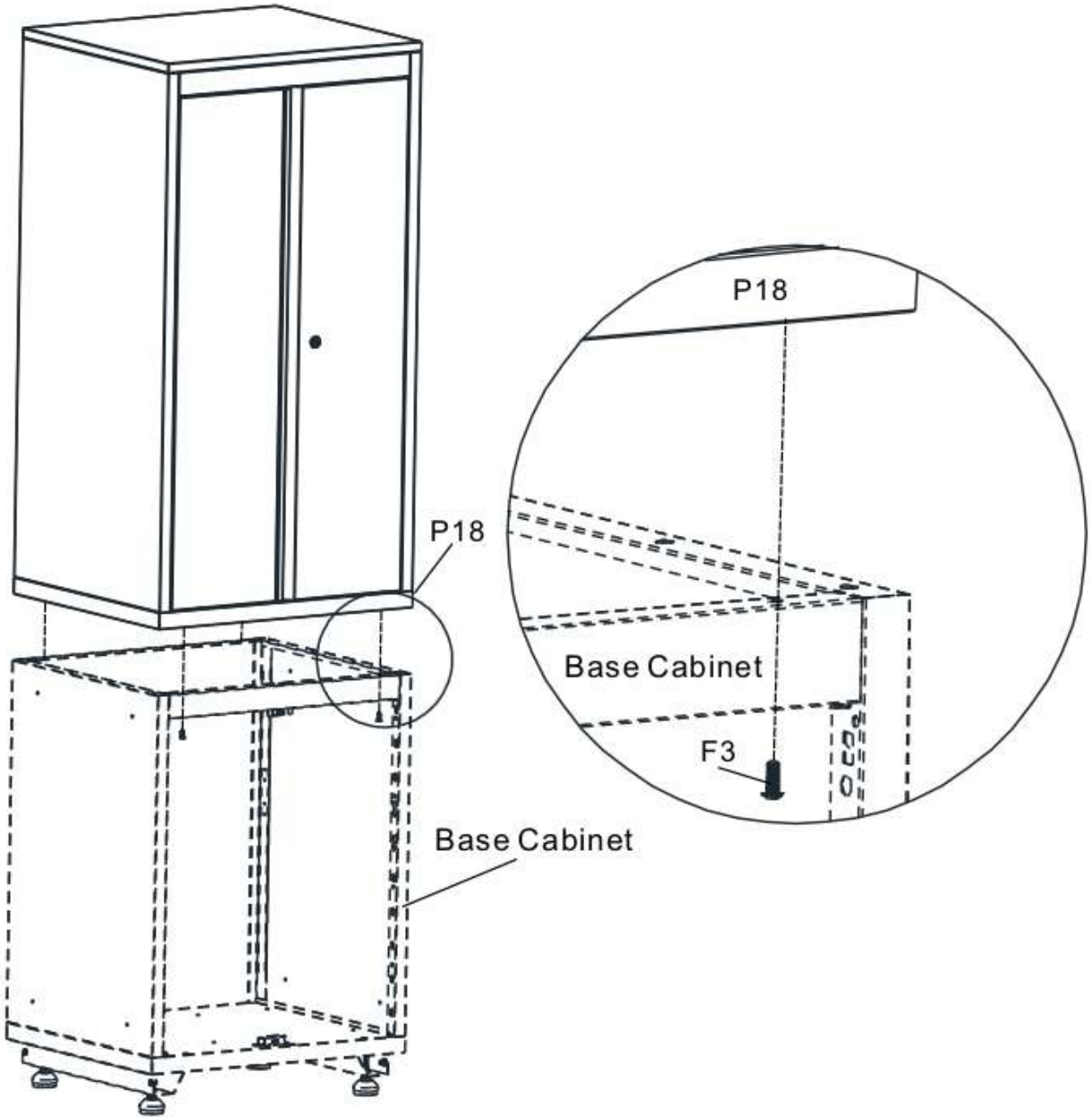

VALSUR

2 Doors Wall Cabinet

Assembly Instructions

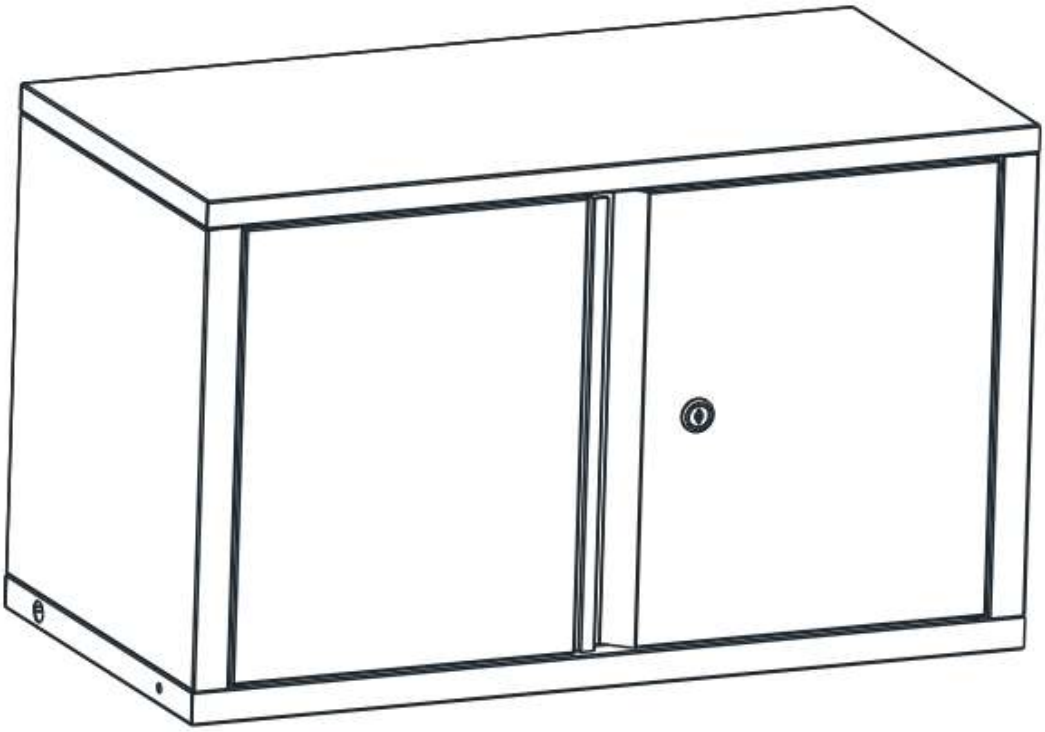

30WC24200

THIS INSTRUCTION BOOKLET CONTAINS IMPORTANT SAFETY INFORMATION.
PLEASE READ AND KEEP FOR FUTURE REFERENCE.

SAFETY

Your safety and the safety of others are very important.

We have provided many important safety messages in this manual and on your product. Always read and obey all safety messages.

⚠ CAUTION Please take safety precautions when using the cabinet.

- Do not step or climb on worktop.
- Do not let children near the cabinet.
- Make sure floor is leveled and flat when using the cabinet.
- Two or more people require to move and assemble cabinet.

CARE

1. Wash the cabinet with a mild detergent and warm water. Do not allow water to remain on the cabinet for any length of time.
2. Use a soft and clean cloth that will not scratch the surface when dusting.
3. Liquid spills should be removed immediately. Using a soft clean cloth, blot the spill gently. Avoid rubbing.
4. Check bolts/screws periodically and tighten them if necessary.

PARTS

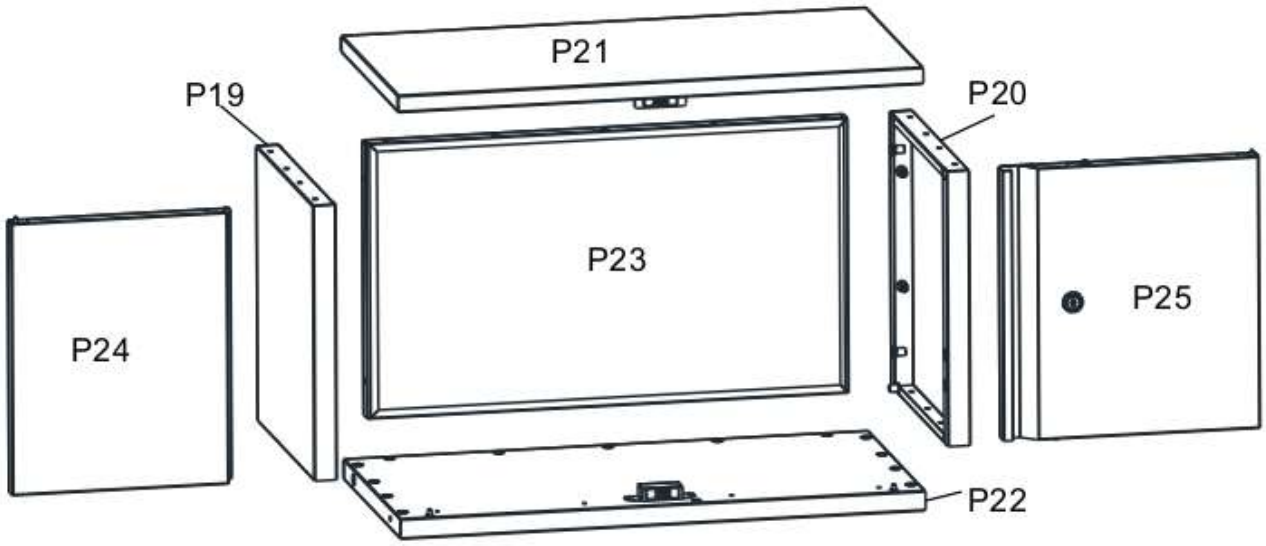

F2
8PCS

F3
M6x12mm
36PCS

ASSEMBLY INSTRUCTIONS

INSTRUCTIONS

> Intended for use in a garage.
> Maximum weight limit is (72 kg) UDL for the cabinet.

ASSEMBLE STEPS

Step 1

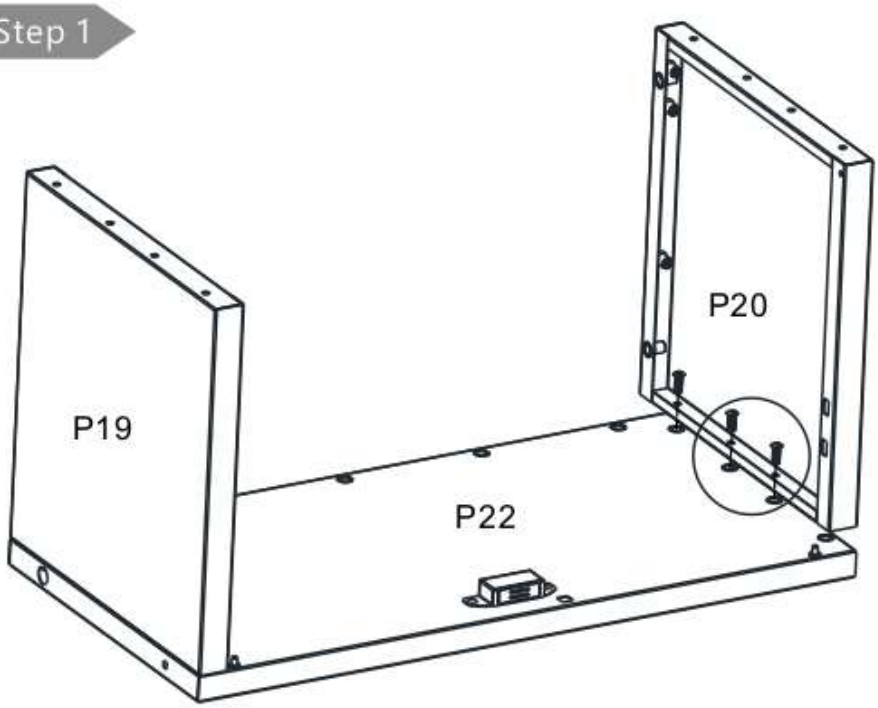

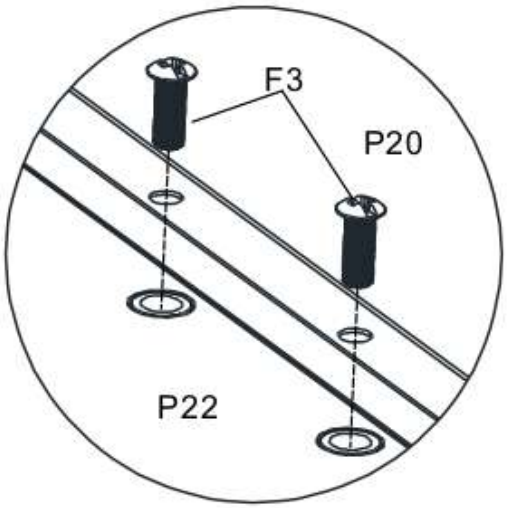

Step 2

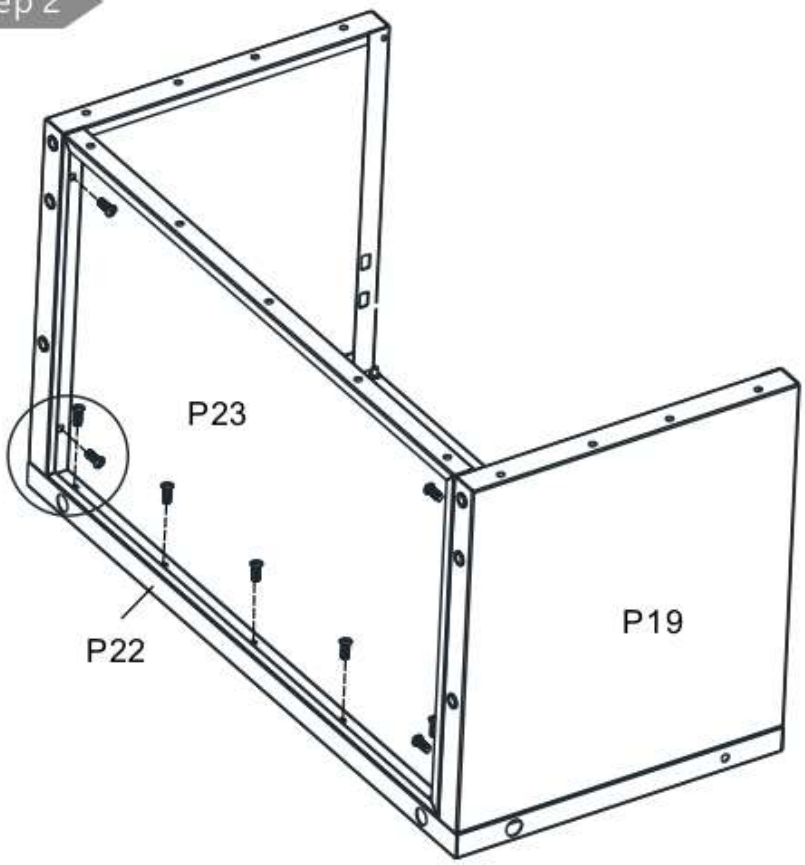

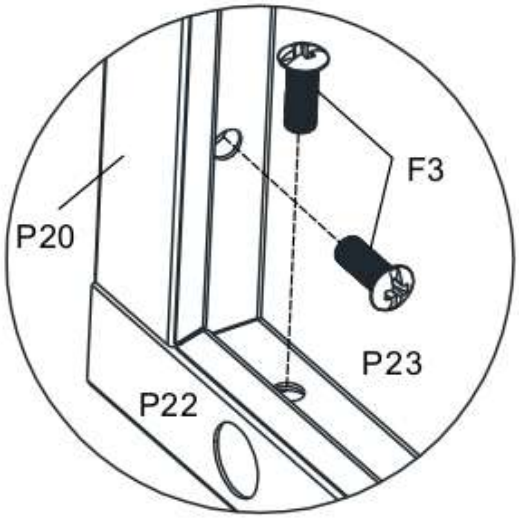

Step 3

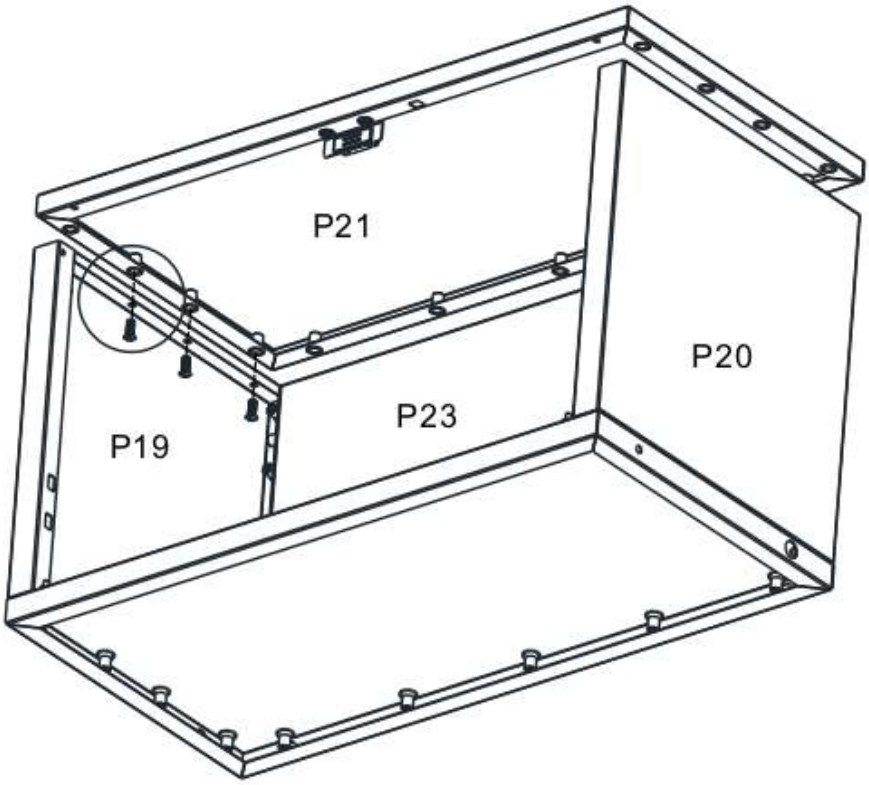

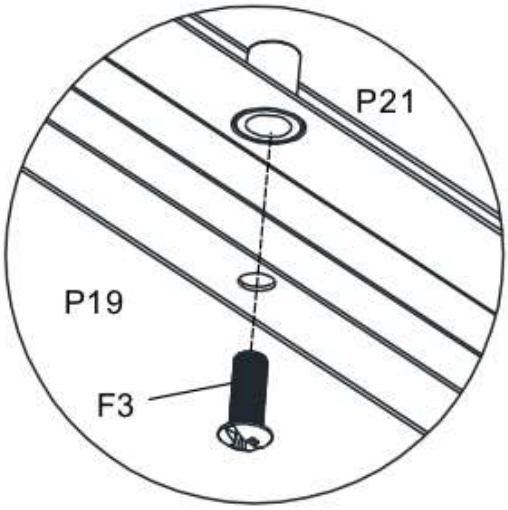

Step 4

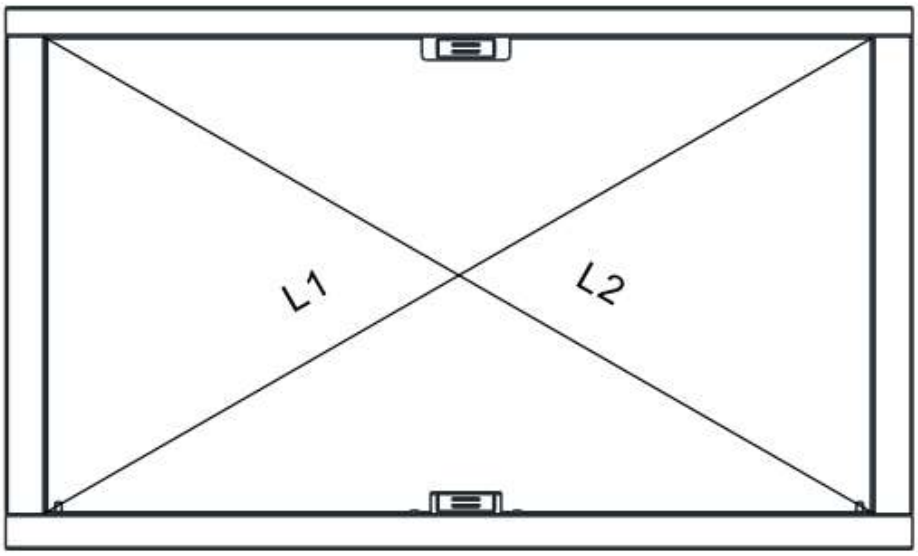

Length:L1=L2

Square the cabinet frame. Make sure the measurements from corner to corner should be equal distance before completely tighten the bolts.

Step 5

F2
P21
P24
P21
P24
P25
P20
P22
P24
F2
P22

Finish

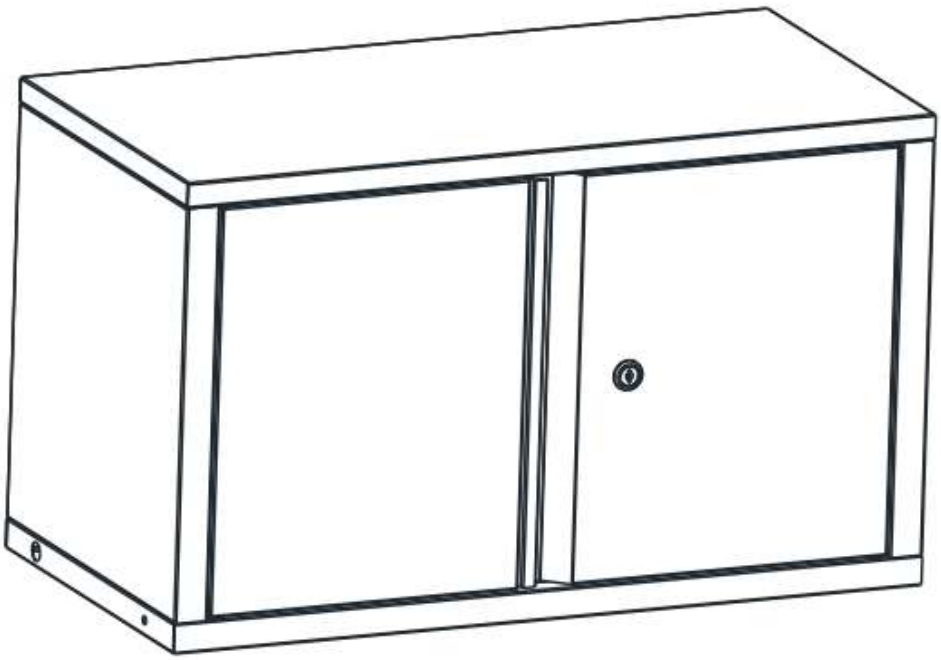

VALSUR

Back Support Bracing

Assembly Instruction

30SA01

THIS INSTRUCTION BOOKLET CONTAINS IMPORTANT SAFETY INFORMATION.
PLEASE READ AND KEEP FOR FUTURE REFERENCE.

SAFETY

Your safety and the safety of others are very important.

We have provided many important safety messages in this manual and on your product. Always read and obey all safety messages.

⚠ CAUTION Please take safety precautions when using the cabinet.

- Do not let children near the plane.
- Two or more people require to move and assemble plane.

CARE

1. Wash the rack with a mild detergent and warm water. Do not allow water to remain on the cabinet for any length of time.
2. Use a soft and clean cloth that will not scratch the surface when dusting.
3. Liquid spills should be removed immediately. Using a soft clean cloth, blot the spill gently. Avoid rubbing.
4. Check bolts/screws periodically and tighten them if necessary

PARTS

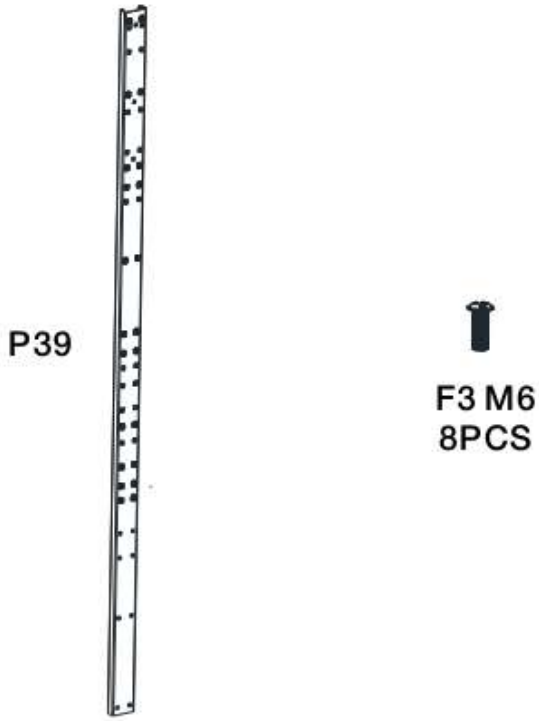

ASSEMBLY INSTRUCTIONS

INSTRUCTIONS

Please install after all cabinets completed the set-up

Step 1

Adjust the bottom of the cabinet and adjust the feet to the same height at all four corners and all cabinets to the same height

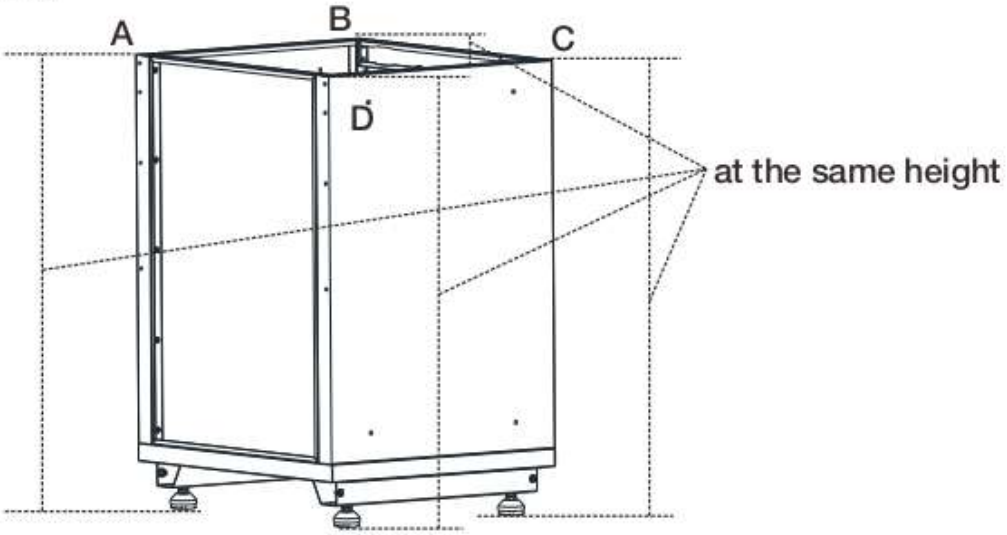

Step 2

before install, please confirm how much racks in need

FROM TOP VIEW:

EXAMPLE 1)

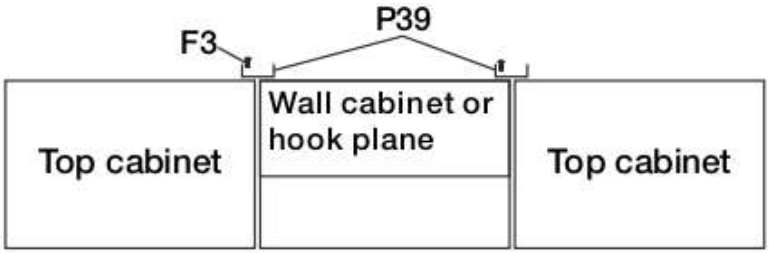

EXAMPLE 2)

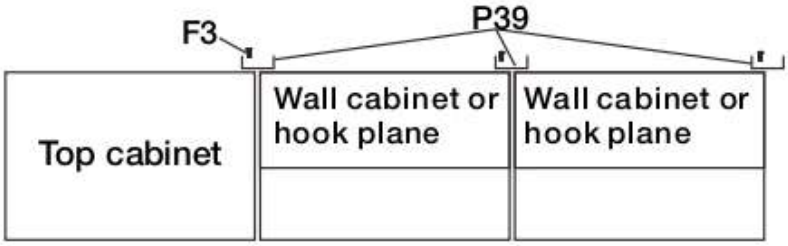

EXAMPLE 3)

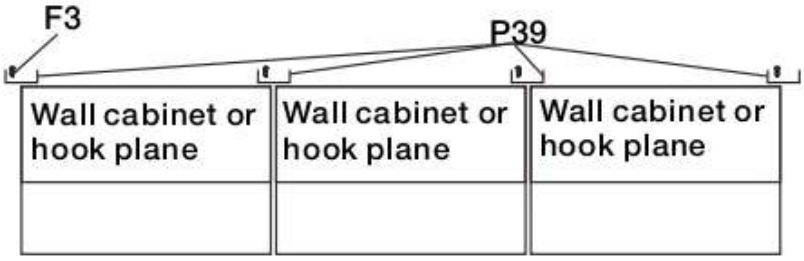

Step 3 fasten the racks to the base cabinet

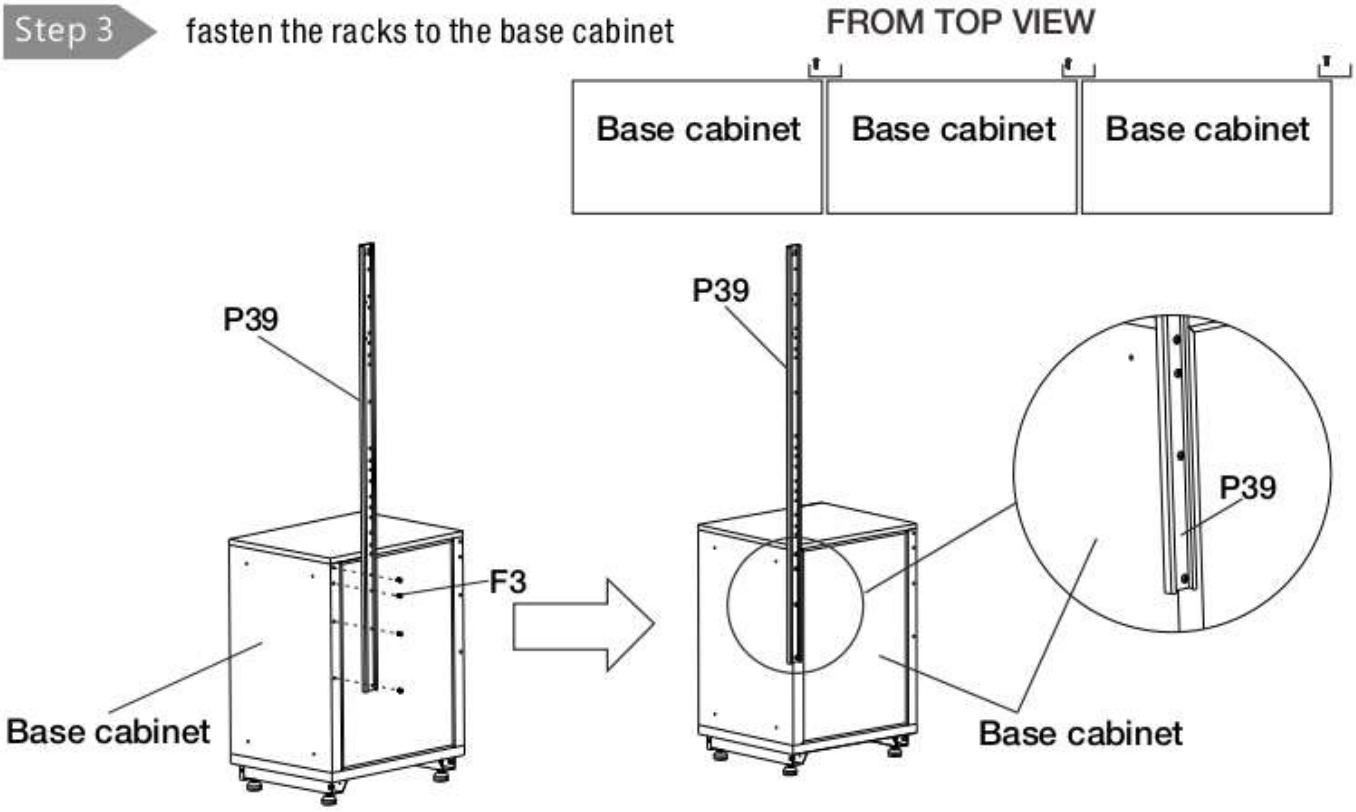

Step 4 Place the base cabinets which had pre–installed racks to the specified position as required,then assemble the hook plane,top cabinets,ect.

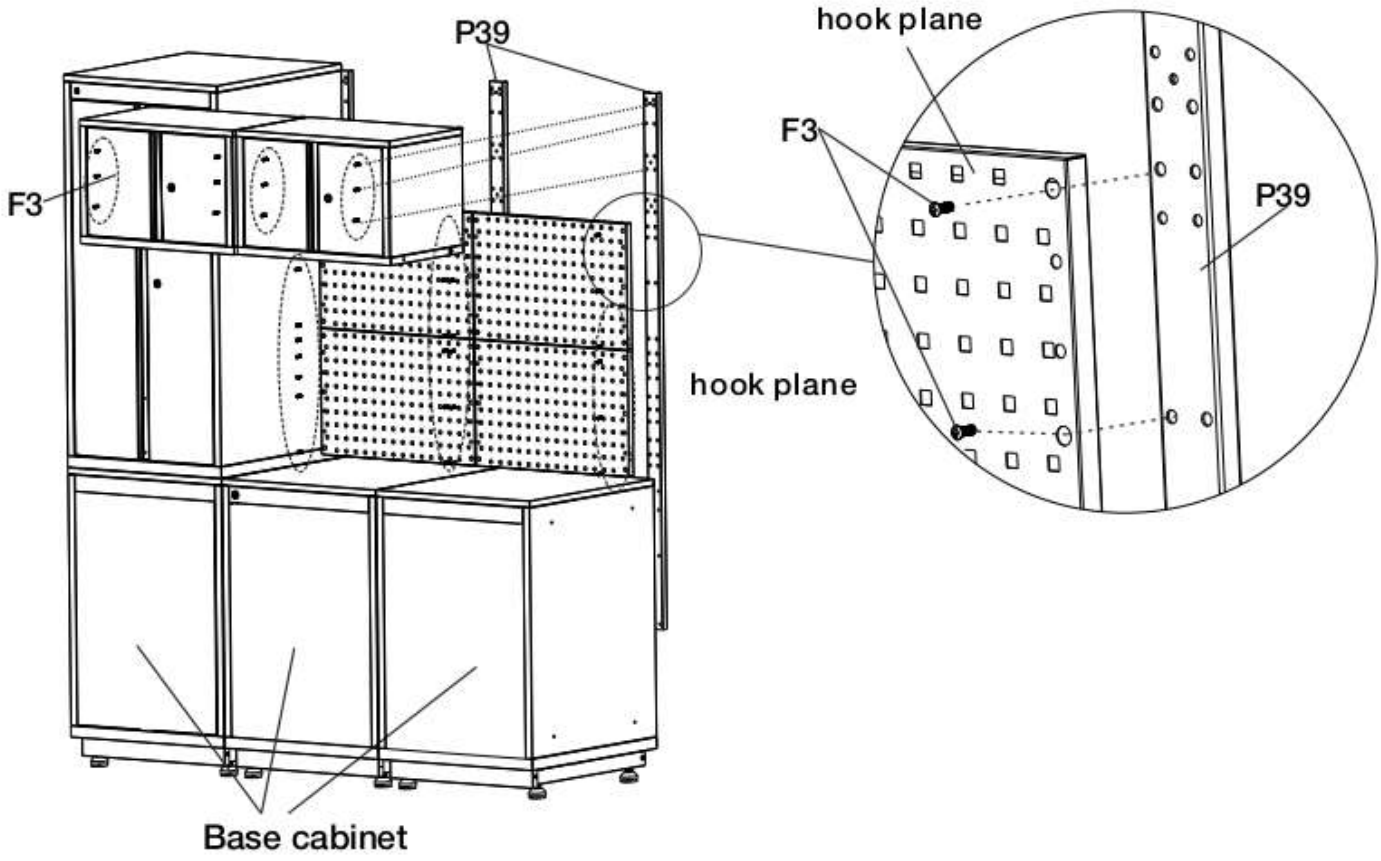

VALSUR

Air Hose Fitting Board

Assembly Instruction

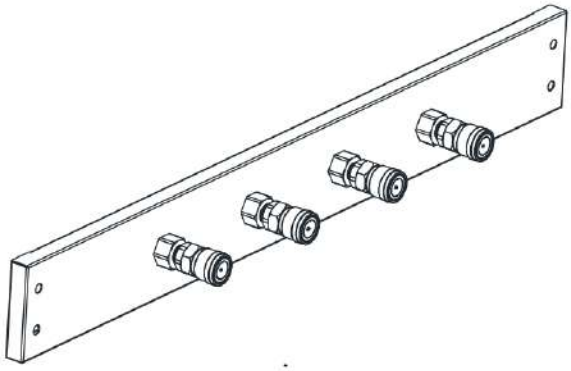

30WP2403A

THIS INSTRUCTION BOOKLET CONTAINS IMPORTANT SAFETY INFORMATION.
PLEASE READ AND KEEP FOR FUTURE REFERENCE

SAFETY

Your safety and the safety of others are very important.

We have provided many important safety messages in this manual and on your product. Always read and obey all safety messages.

Notice:

- When installing the thread, do not exceed the maximum tightening torque to prevent damage.
- Only use for quick fluid couplings .
- Do not connect to quick fluid couplings from other manufacturers.
- Do not exceed the maximum rated pressure.
- Only work in operating temperature range to prevent the seal material from being worn.
- Do not hit, bend, stretch,to prevent damage.
- Do not connect it in dirty areas such as metal power or sand, to prevent malfunction or leakage.
- Please do not use it for gas retention.
- Do not use cracked hoses.
- Leak check should be carried out before use.Stop using it immediately and replace it with new ones if leaking

CARE

1. Wash the cabinet with a mild detergent and warm water. Do not allow water to remain on the cabinet for any length of time.
2. Use a soft and clean cloth that will not scratch the surface when dusting.
3. Liquid spills should be removed immediately. Using a soft clean cloth, blot the spill gently. Avoid rubbing.
4. Check bolts/screws periodically and tighten them if necessary.

PARTS

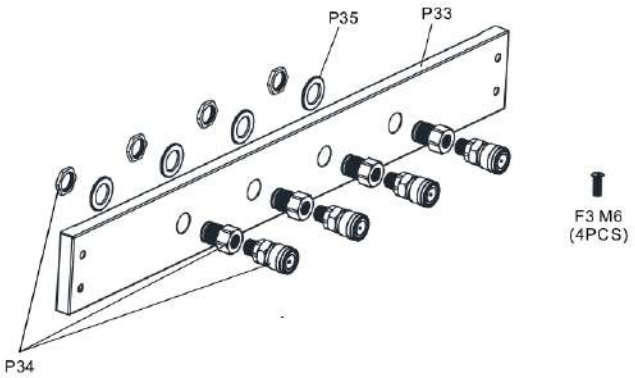

ASSEMBLY INSTRUCTIONS

INSTRUCTIONS

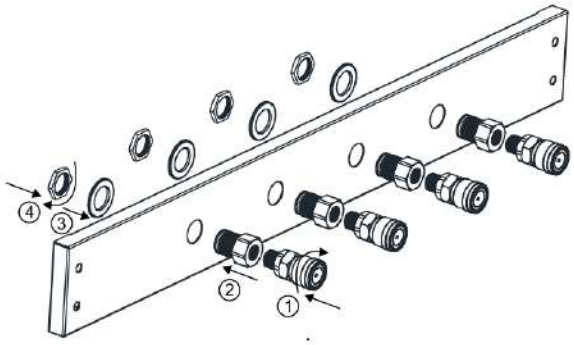

With Rack

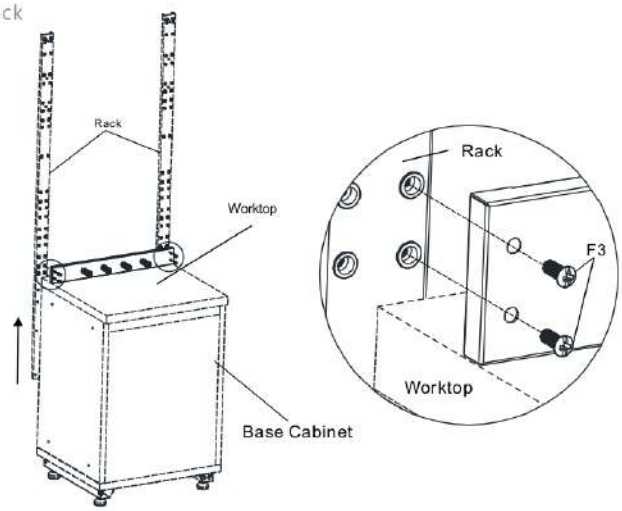

Notice : The position of the hole is the fifth and sixth holes from the bottom up inthe direction of the arrow.

VALSUR

Power Socket Plane

Product Information Guide

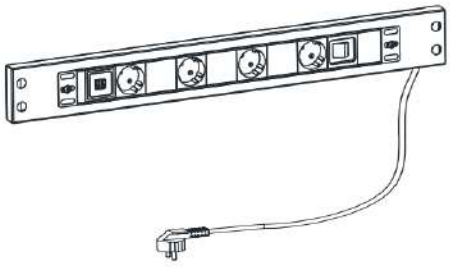

30WP2403P

THIS INSTRUCTION BOOKLET CONTAINS IMPORTANT SAFETY INFORMATION.
PLEASE READ AND KEEP FOR FUTURE REFERENCE.

SAFETY

Your safety and the safety of others are very important.
We have provided many important safety messages in this manual and on your appliance. Always read and obey all safety messages.

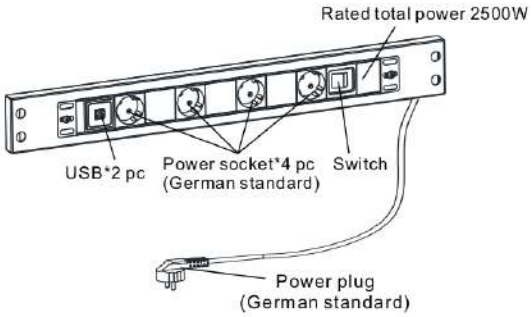

All safety messages will tell you what the potential hazard is, tell you how to reduce the chance of injury, and tell you what can happen if the instructions are not followed.

Notice :

- Untie the cable tie at first.
- Do not use in a damp environment
- Do not put it in a place where children can easily reach it
- Total power should not exceed rated power
- Do not disassemble the plane without authorization. Please contact a professional if necessary

PARTS

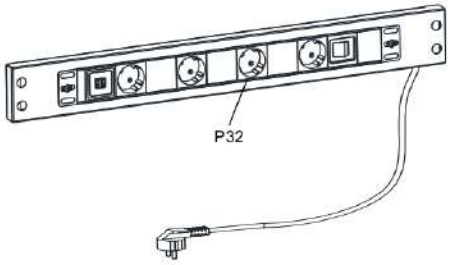

ASSEMBLY INSTRUCTIONS

INSTRUCTIONS

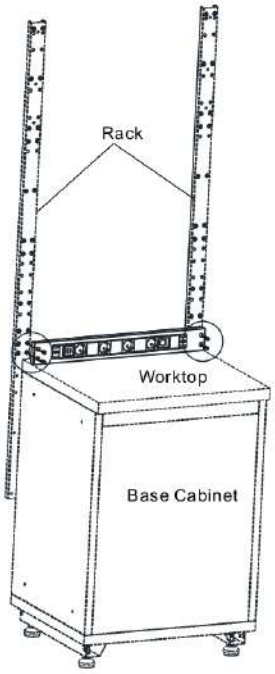

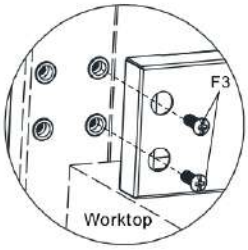

VALSUR

Small Mesh Pegboard

Assembly Instruction

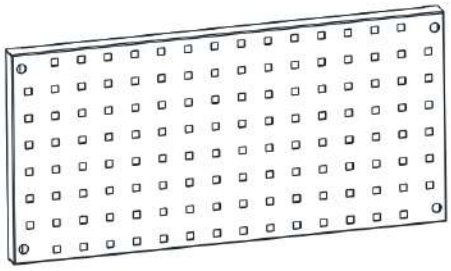

30WP2412S

THIS INSTRUCTION BOOKLET CONTAINS IMPORTANT SAFETY INFORMATION.
PLEASE READ AND KEEP FOR FUTURE REFERENCE.

SAFETY

Your safety and the safety of others are very important.

We have provided many important safety messages in this manual and on your product. Always read and obey all safety messages.

⚠ CAUTION Please take safety precautions when using the cabinet.

- Do not let children near the plane.
- Two or more people require to move and assemble plane..

CARE

1. Wash the pegboard with a mild detergent and warm water. Do not allow water to remain on the cabinet for any length of time.
2. Use a soft and clean cloth that will not scratch the surface when dusting.
3. Liquid spills should be removed immediately. Using a soft clean cloth, blot the spill gently. Avoid rubbing.
4. Check bolts/screws periodically and tighten them if necessary.

PARTS

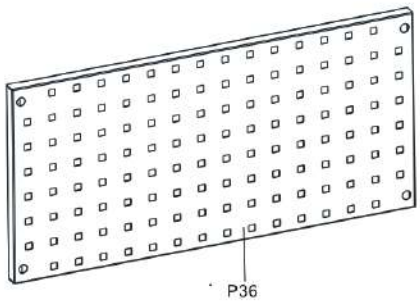

F3 M6
(4PCS)

ASSEMBLY INSTRUCTIONS

> **Intended for use in a garage.**
> **Maximum weight limit is 25kg UDL for each plane.**

INSTRUCTIONS

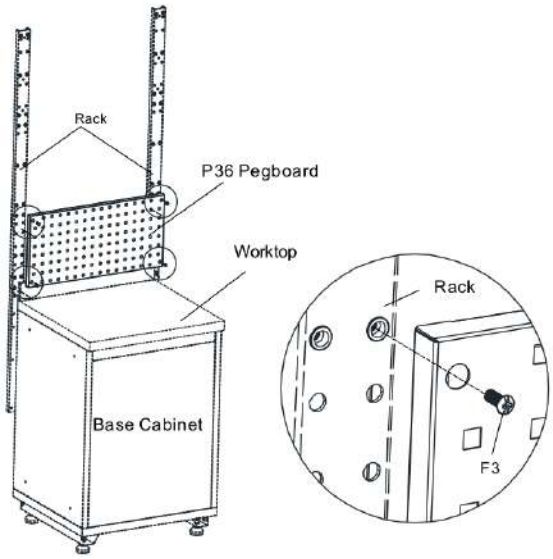

VALSUR

Main Mesh Pegboard

Assembly Instruction

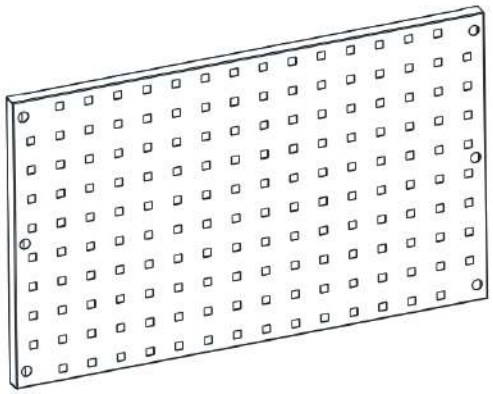

30WP2415S

THIS INSTRUCTION BOOKLET CONTAINS IMPORTANT SAFETY INFORMATION.
PLEASE READ AND KEEP FOR FUTURE REFERENCE.

SAFETY

Your safety and the safety of others are very important.

We have provided many important safety messages in this manual and on your product. Always read and obey all safety messages.

⚠ CAUTION Please take safety precautions when using the cabinet.

- Do not let children near the plane.
- Two or more people require to move and assemble plane.

CARE

1. Wash the pegboard with a mild detergent and warm water. Do not allow water to remain on the cabinet for any length of time.
2. Use a soft and clean cloth that will not scratch the surface when dusting.
3. Liquid spills should be removed immediately. Using a soft clean cloth, blot the spill gently. Avoid rubbing.
4. Check bolts/screws periodically and tighten them if necessary.

PARTS

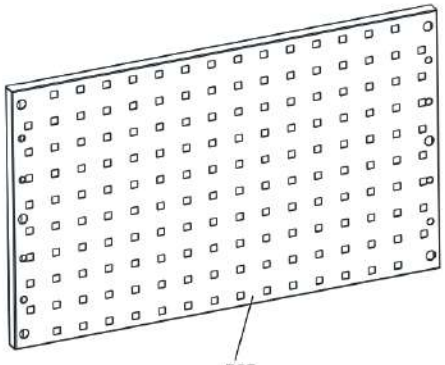

P37

F3 M6
(6PCS)

ASSEMBLY INSTRUCTIONS

> **Intended for use in a garage.**
> **Maximum weight limit is 25kg UDL for each plane.**

INSTRUCTIONS

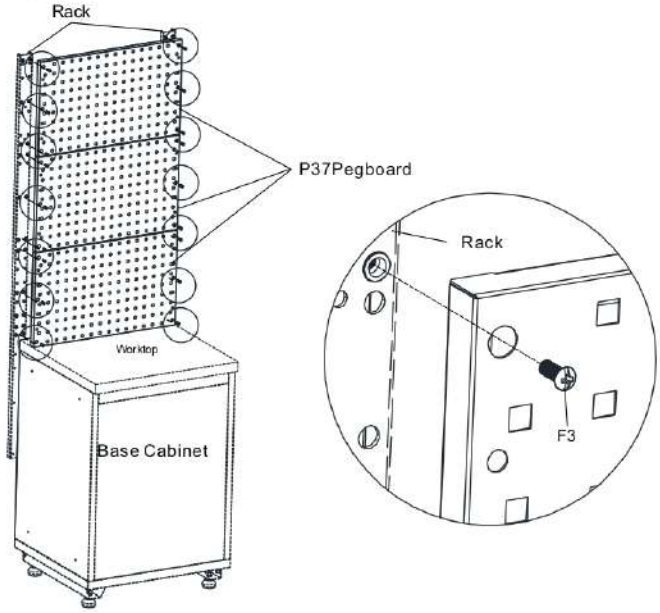

VALSUR

LED Work Light

Assembly Instruction

30SA04

30SA05

THIS INSTRUCTION BOOKLET CONTAINS IMPORTANT SAFETY INFORMATION.
PLEASE READ AND KEEP FOR FUTURE REFERENCE.

SAFETY

Your safety and the safety of others are very important.

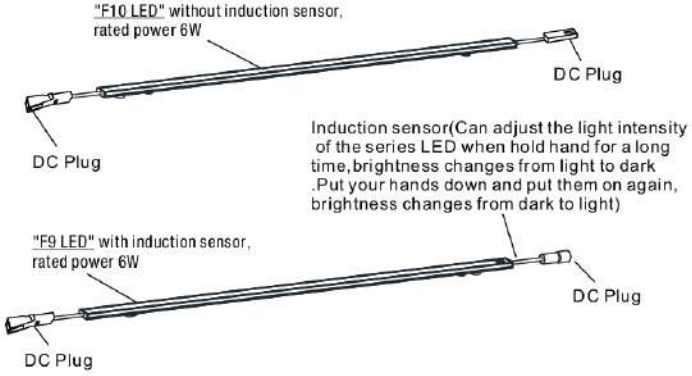

Notice:

- Do not put it in a place where children can easily reach it.
- Do not disassemble the LED lights.
- The power for each is 6W, if there is 2 strips, then it is 12W, but suggest not exceed 8 strips, because the brightness will decrease.
- Transformer (F8) , F9 and F10 are packed separately ,magnets are packed with F9&F10, each box with 2pcs

PARTS

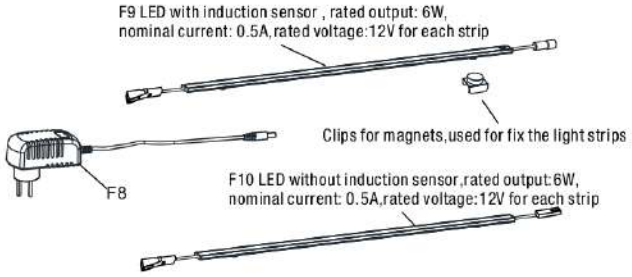

ASSEMBLY INSTRUCTIONS

INSTRUCTIONS

LED Collocation scheme No.1:F8+F9+F10

LED Collocation scheme No.2:F8+F9+F10+F10

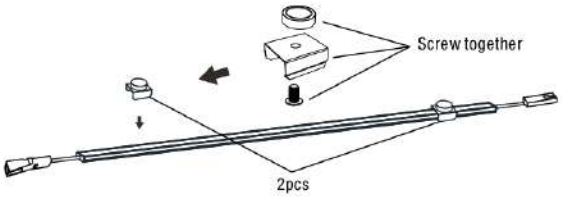

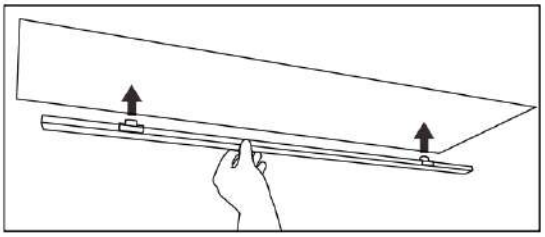

VALSUR

SS Bench Top

Assembly Instruction

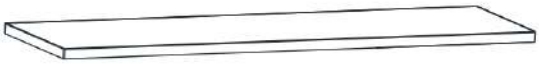

30WS7322M

THIS INSTRUCTION BOOKLET CONTAINS IMPORTANT SAFETY INFORMATION.
PLEASE READ AND KEEP FOR FUTURE REFERENCE.

SAFETY

Your safety and the safety of others are very important.

We have provided many important safety messages in this manual and on your product. Always read and obey all safety messages.

⚠ CAUTION Please take safety precautions when using the cabinet.

- Do not step or climb on worktop.
- Make sure bench top fixed to the base cabinet with screw.
- Make sure floor is leveled and flat when using the worktop.
- Two or more people require to move and assemble cabinet.

WORKTOP CARE

1. Wash the stainless steel bench top with a mild detergent and warm water. Do not allow water to remain onthe cabinet for any length of time.
2. Use a soft and clean cloth that will not scratch the surface when dusting.
3. Liquid spills should be removed immediately. Using a soft clean cloth, blot the spill gently. Avoid rubbing.
4. Don't use sharp objects to scratch the surface and don't knock on the table.

PARTS

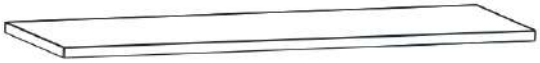

P57

F3 M6
(10PCS)

ASSEMBLY INSTRUCTIONS

INSTRUCTIONS
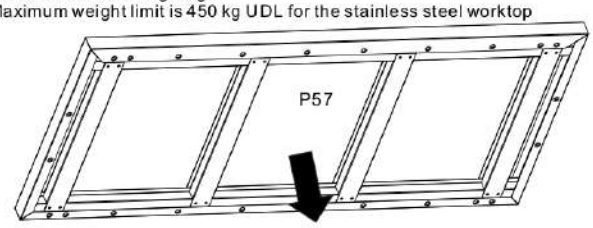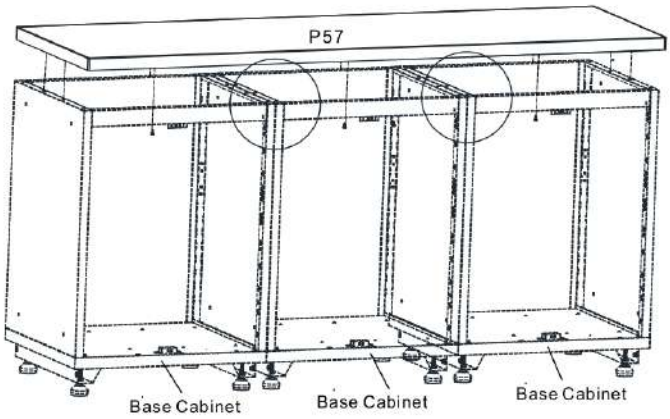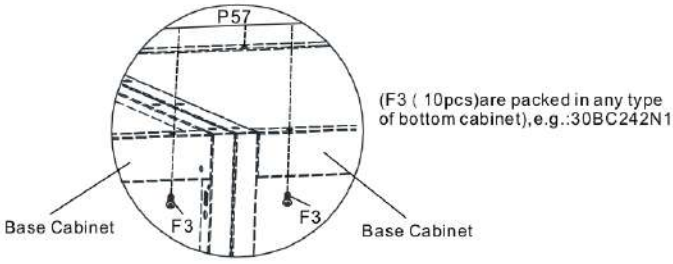
> Intended for use in a garage
> Maximum weight limit is 450 kg UDL for the stainless steel worktop