# MOD. AR-800PK REMACHADORA HIDRONEUMÁTICA

**SPECIFICATIONS :**

Blind Rivet Setting Capacity--1/4" , 3/16",5/32", 1/8"
Traction Powe ……3500Lbs
Stroke ……..……. 19mm (3/4")
Operating Air Pressure ……. 90 PSI
Length :…….…….. 332mm(13")

Weight…….…… 3.4LBS
Sound Pressure…… 75 dB(A)
Vibration ……..…. < 2.5 M/S²
Air Consumption..... 3 L/ stroke

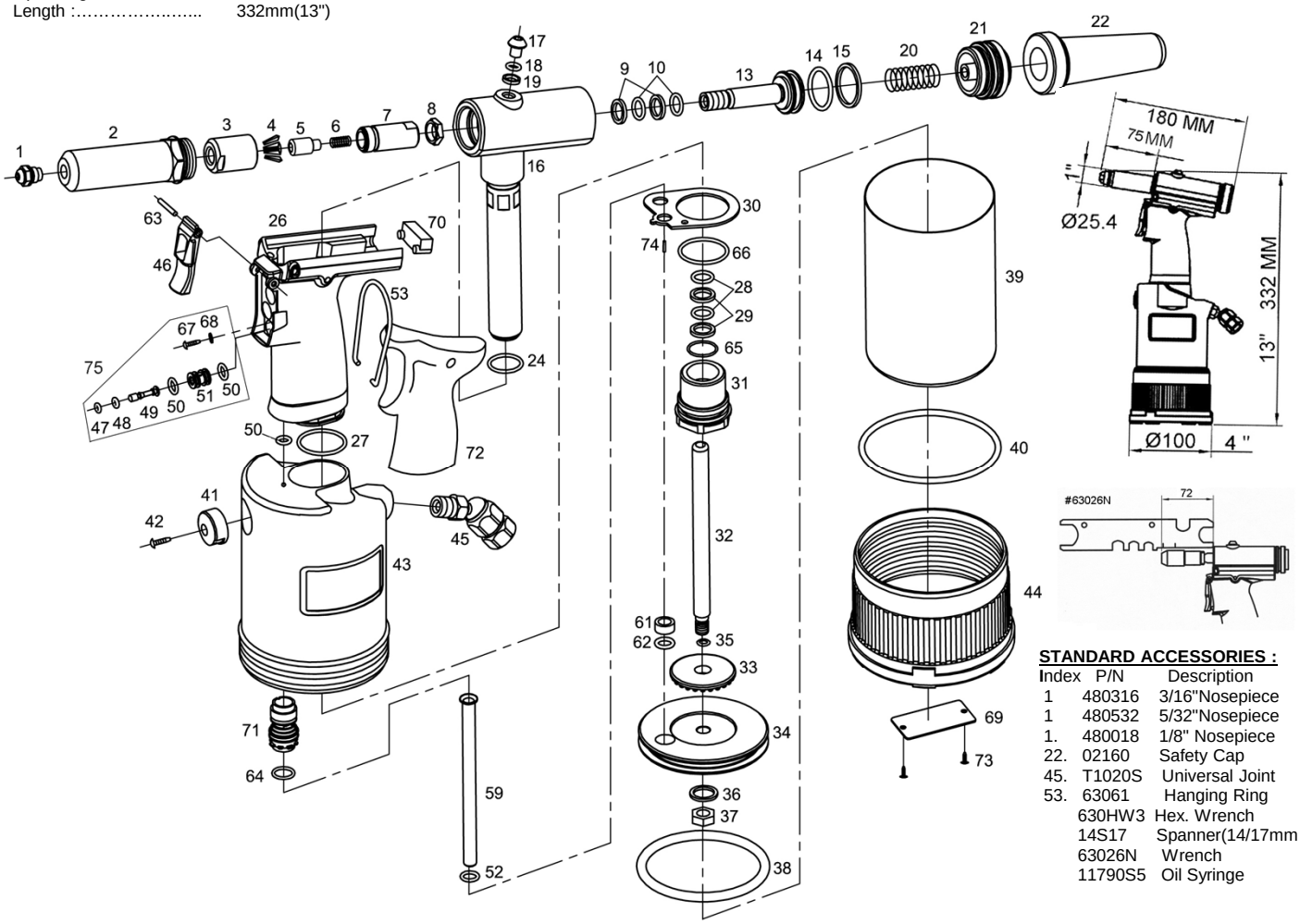


**STANDARD ACCESSORIES :**

| Index | P/N | Description |
|---|---|---|
| 1 | 480316 | 3/16"Nosepiece |
| 1 | 480532 | 5/32"Nosepiece |
| 1. | 480018 | 1/8" Nosepiece |
| 22. | 02160 | Safety Cap |
| 45. | T1020S | Universal Joint |
| 53. | 63061 | Hanging Ring |
| | 630HW3 | Hex. Wrench |
| | 14S17 | Spanner(14/17mm |
| | 63026N | Wrench |
| | 11790S5 | Oil Syringe |

(MA640-1) 1/2014C6

| Index. No. | Part No. | Description | |
|---|---|---|---|
| 1 | 500064 | 1/4" Nosepiece | |
| 2 | 54015 | Head | |
| 3 | 54009 | Jaw Housing | |
| 4 | 10508 | Jaws (3pcs/set) | |
| 5 | 11507 | Jaw Pusher | |
| 6 | 540005 | Spring | |
| 7 | 64006 | Jaw Housing Coupler | |
| 8 | 63014 | Nut | |
| *9 | 11520 | X-Ring Washer (2) | |
| *10 | 11558 | X-Ring Seal (2) | |
| 13 | 64051W | Hydraulic Plunger | |
| *14 | P2224U | O-Ring Seal (#P2224) | |
| *15 | 48022 | O-Ring Washer | |
| 16 | 64002V9 | Hydraulic Section Assy | |
| 17 | 630M5 | Oil Plug | |
| *18 | R4X2 | O-Ring Seal | |
| *19 | 630W5 | Fill Washer | |
| 20 | 10453B | Hyd. Return Spring | |
| 21 | 63011 | Screw Plug | |
| *24 | 02170 | O-Ring | |
| 26 | 63003 | Hydraulic Handle | |
| *27 | 630356 | O-Ring Seal | |
| *28 | 10554 | X-Ring Seal (2) | |
| *29 | 10558 | O-Ring Washer (2) | |
| 30 | 63032 | Pipe Washer | |

| Index. No. | Part No. | Description | |
|---|---|---|---|
| 31 | 64057 | Screw Plug | |
| 32 | 64022 | Plunger Rod | |
| 33 | 63030 | Cushion | |
| 34 | 63020 | Piston | |
| *35 | R5X15 | O-Ring Seal | |
| *36 | 48047 | Washer | |
| 37 | 48048 | Nut | |
| *38 | R70X57 | O-Ring Seal | |
| 39 | 64008 | Cylinder Cup | |
| *40 | R78X2.8 | O-Ring Seal | |
| 41 | 63031 | Exhaust Cap | |
| 42 | WS3X10 | Screw | |
| 43 | 63029 | Cylinder Body | |
| 44 | 64035 | Cylinder Cap | |
| 46 | 63010 | Trigger | |
| *47 | R1-9X19 | O-Ring Seal | |
| *48 | R2X15 | O-Ring Seal | |
| 49 | 63016 | Trigger Stem | |
| *50 | 02197 | O-Ring Seal (3) | |
| 51 | 63009 | Trigger Bush | |
| *52 | 680RW13 | O-Ring Seal | |
| 59 | 64039 | Valve Tube | |
| 61 | 63079 | Bush | |
| *62 | 35039 | O-Ring | |
| 63 | 25018B | Roll Pin | |

| Index. No. | Part No. | Description | |
|---|---|---|---|
| *64 | 25022 | O-Ring Seal | |
| *65 | R18X2 | O-Ring Seal | |
| *66 | R266X24 | O-Ring Seal | |
| 67 | 630M3 | Screw | |
| *68 | 630W3 | Washer | |
| 70 | 63060 | Rubber Plug | |
| **71** | **68036AK** | **Valve Kit** | |
| 74 | 400031 | Pin | |
| **75** | **630090** | **Air Valve Bush Ass'y** | |
| **Content:** | | | |
| 47 | R1-9x19 | O Ring Seal | |
| 48 | R2X15 | O Ring Seal | |
| 49 | 63016 | Trigger Stem | |
| 50 | 02197 | O Ring Seal (2) | |
| 51 | 63009 | Trigger Bush | |
| 67 | 630M3 | Screw | |
| 68 | 630W3 | Washer | |
| **選擇性配件 *** OPTIONAL ACCESSORIES *** ** | | | |
| 1 | 500014AV | 3/16"Nosepiece for *Monobolt | |
| | 500015AV | 1/4"Nosepiece for *Monobolt | |
| 69 | 63048 | Name Plate | |
| 72 | 64086 | Rubber Grip | |
| 73 | 630BS3X6 | Screw (2) | |
| **" * " REPAIR KIT** | | | |