Modelo AR-5

REMACHADORA 4.8 MM.

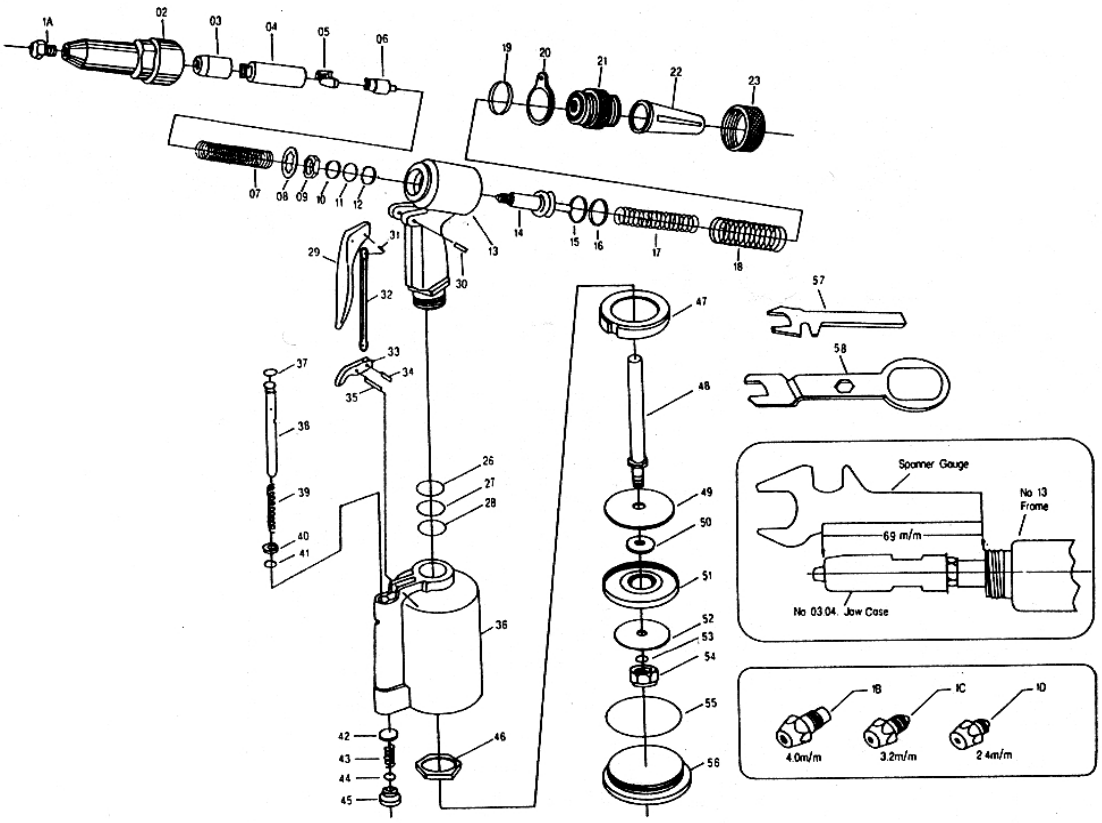

PARTS LIST

No.	Parts No.	Description	Q'ty
1A	6615-01A	Nosepiece 4.8m/m(3/16")	1
1B	6615-01B	Nosepiece 4.0m/m (5/32")	1
1C	6615-01C	Nosepiece 3.2m/m(1/8")	1
1D	6615-01D	Nosepiece 2.4m/m (3/32")	1
02	6615-02	Frame Head	1
03	6615-03	Jaw Case	1
04	6615-04	Jaw Case Joint	1
05	6615-05	Jaw (5x10)	2
06	6615-06	Jaw Pusher	1
07	6615-07	Jaw Pusher Spring (1.0X8.4X28X11N)	1
08	6615-08	Jaw Case Washer Ring	1
09	6615-09	Jaw Case Lock Nut	1
10	6615-10	Frame O Ring (P12 x2.4)	1
11	6615-11	Frame O Ring (P12x2.4)	1
12	6615-12	Frame Back Up Ring (P12x1.2)	1
13	6615-13	Frame	1
14	6615-14	Oil Piston	1
15	6615-15	Oil Piston O Ring (P22x3.5)	1
16	6615-16	Oil Piston Back Up Ring (P22x1.2)	1
17	6615-17	Return Spring A (2x15.2x57x10N)	1
18	6615-18	Return Spring B (2.6x22.5x52x7N)	1
19	6615-19	Hanging Clip O Ring (P27x2)	1
20	6615-20	Hanging Clip	1
21	6615-21	Frame Cap	1
22	6615-22	Saftey Cap	1
23	6615-23	Frame Cap Nut	1
26	6615-26	Frame Joint Back Up Ring (P12x1.2)	1
27	6615-27	Frame Joint O Ring (P12x2.4)	1
28	6615-28	Frame Joint O Ring (P12x2.4)	1
29	6615-29	Trigger	1

No.	Parts No.	Description	Q'ty
30	6615-30	Trigger Pin (3x24)	1
31	6615-31	Rod Pin (3x6)	1
32	6615-32	Trigger Rod	1
33	6615-33	Trigger Lever	1
34	6615-34	Rod Pin (3x6)	1
35	6615-35	Lever Pin (3x18)	1
36	6615-36	Air Cylinder	1
37	6615-37	Valve Pusher O Ring (P7x1.9)	1
38	6615-38	Brass Valve Pusher	1
39	6615-39	Valve Pusher Spring (1.2x9.4x43x13N)	1
40	6615-40	Valve Pusher Brass Collar	1
41	6615-41	Valve Pusher O Ring (P6x2)	1
42	6615-42	Valve (13.5m/m)	1
43	6615-43	Valve Spring (1.0x9.7x24x6N)	1
44	6615-44	Valve Cap O ring (P12x2.4)	1
45	6615-45	Valve Cap	1
46	6615-46	Frame Lock Nut (35x6m/m)	1
47	6615-47	Rubber Cushion	1
48	6615-48	Air Piston Stem	1
49	6615-49	Iron Plate Washer (55x2.5)	1
50	6615-50	Air Piston Iron Plate (30x3)	1
51	6615-51	Air Piston Ring (70.5x12)	1
52	6615-52	Iron Plate Washer (67x2.5)	1
53	6615-53	Lock Washer	1
54	6615-54	Air Piston Lock Nut (Nonskid)	1
55	6615-55	Air Cylinder O Ring (68x2.5)	1
56	6615-56	Air Cylinder Cap	1
57	6615-57	Spanner Gauge (17m/m, 14m/m)	1
58	6615-58	Spanner (15m/m, 10m/m, 24m/m)	1