AR-6 REMACHADORA

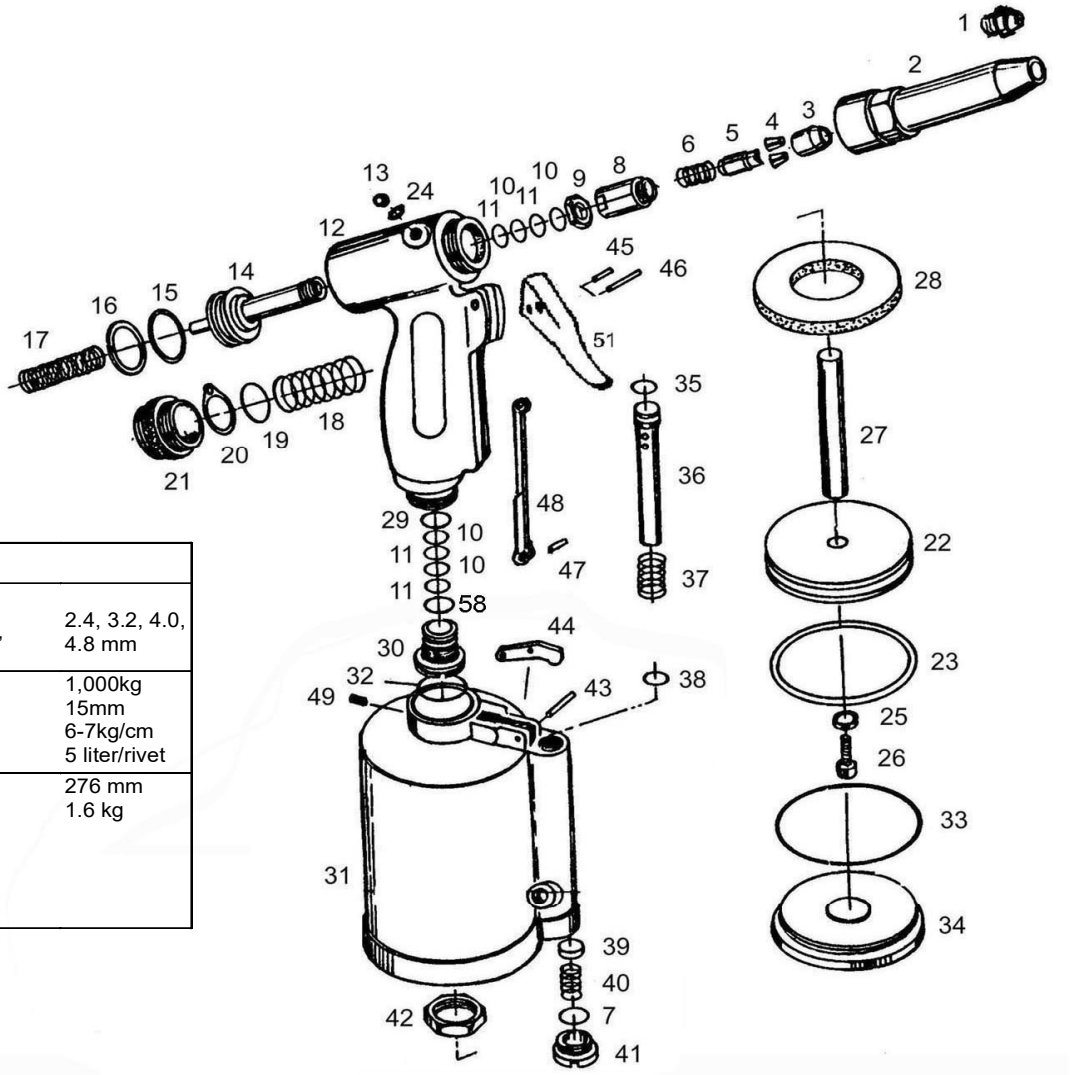

SPECIFICATIONS

Model No.	AR-6	
Riveting Capacity	All Material 3/32", 1/8", 5/32", 3/16"	 2.4, 3.2, 4.0, 4.8 mm
Traction Power Hydraulic Stroke Operating Air Pressure Air Consumption	2,200 lbs 5/8" 60-90 PSI 0.17Cuft.	1,000kg 15mm 6-7kg/cm 5 liter/rivet
Overall Length Net Weight Min. Hose Size Air Inlet Sound Pressure Vibration	10-7/8" 3.6 lbs 3/8" I.D. 1/4" NPT 85 DBA <2.5M/S^2	276 mm 1.6 kg

3/2024A4

Index NO.	PART NO.	DESCRIPTION	NO. Req'd
1D	107163	3/16" Nosepiece	1
2	02115A	Head	1
3	10709	Jaw Housing	1
4	107B08	Jaw	2
5	107B07	Jaw Pusher	1
6	02105	Spring	1
7	10548	O-Ring Seal	1
8	02106	Jaw Housing Coupler	1
9	02104	Nut	1
10	11520	X-Ring Seal	4
11	11558	Ring Washer	4
12	02102	Hydraulic Seciton	1
13	02171	Oil Plug	1
14	021510	Hydraulic Plunger	1
15	11501	O-Ring Seal	1
16	11549	O-Ring Washer	1
17	02152	Return Spirng	1
18	02153	Return Spirng	1
19	02127	O-Ring Seal	1
20	02159	Hanging Ring	1
21	02110	Screw Plug	1
22	02123	Piston Disc	1
23	02124	Air Piston Ring	1
24	20412	O-Ring Seal	1
25	76527	Spring Washer	1
26	10427	Piston Head Lock Screw	1

Index NO.	PART NO.	DESCRIPTION	NO. Req'd
27	02122	Plunger Rod	1
28	02130	Damping Ring	1
29	25022	O-Ring Seal	1
30	02157	Screw Plug	1
31	02101	Air Cylinder	1
32	02116	O-Ring Seal	1
33	10431	O-Ring Seal	1
34	02103	Air Cylinder Cap	1
35	02197	O-Ring Seal	1
36	02139	Valve Tube	1
37	11541	Valve Spring	1
38	11560	O-Ring Seal	1
39	11542	Valve Plate	1
40	76514	Spring	1
41	10550	Screw Plug	1
42	02121	Lock Nut	1
43	02167	Pin	1
44	02134	Trigger Lever	1
45	02168	Pin	1
46	02169	Pin	1
47	N2.5x6	Pin	1
48	02133	Trigger Rod	1
49	02172	Set Screw	1
51	02138	Trigger	1
58	02170	O-Ring Seal	1

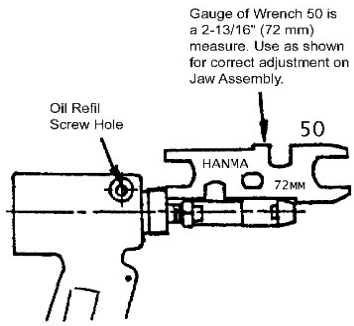

標準配件 *** ACCESSORIES ***

Index.	Part No.	Description	No. Req'd
1A	106160	3/32" Nosepiece	1
1B	107161	1/8" Nosepiece	1
1C	107162	5/32" Nosepiece	1
4	107B08	Jaws	2
50	10647	Wrench	1
	10459	14/17mm Wrench(14S17)	1