28DC504LEV615

B2800B/50E CM3 23050 AIRUM

Fecha validez 03/03/2022

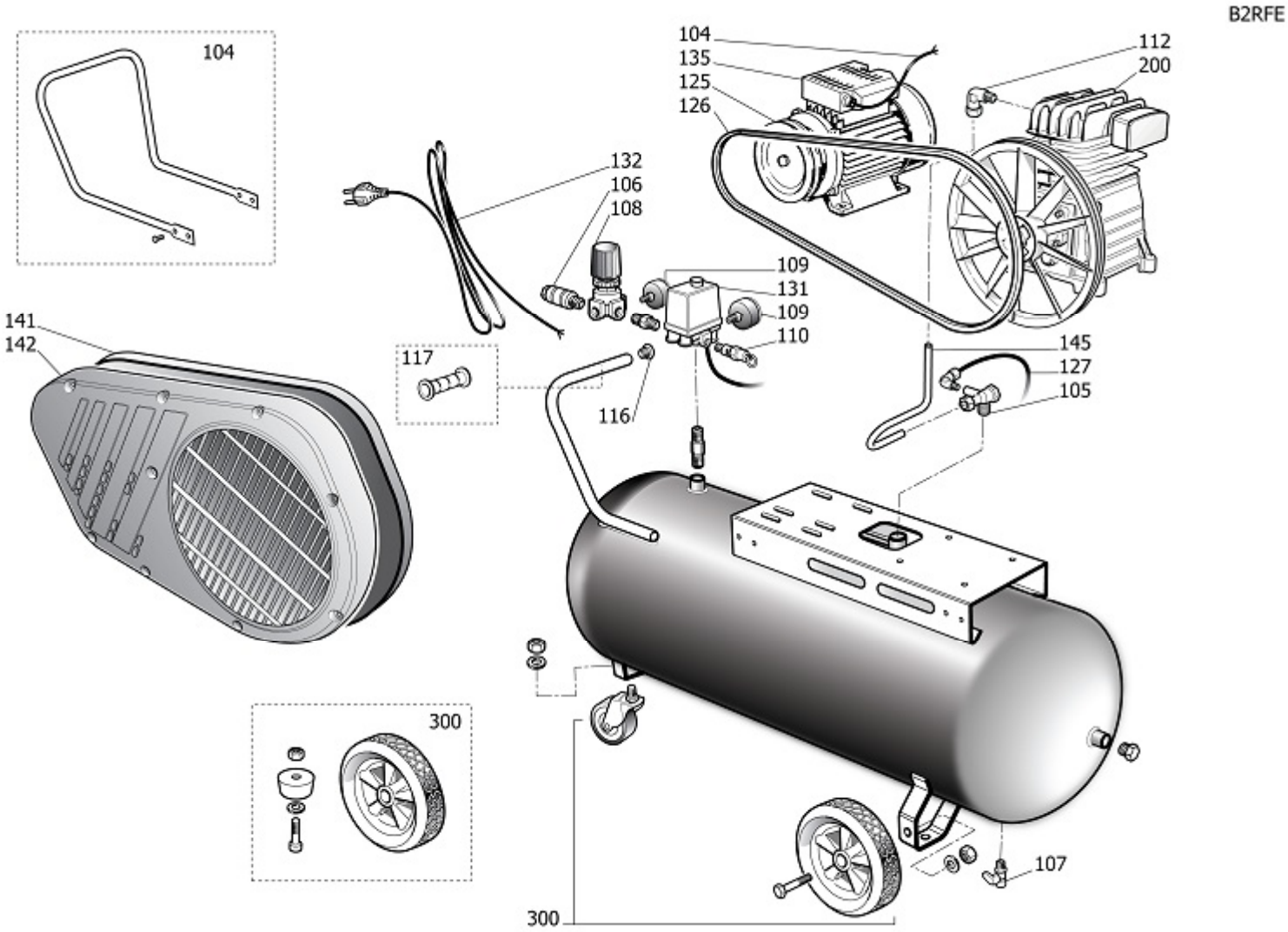

28DC504LEV615

B2800B/50E CM3 23050 AIRUM

Pos	Component		MU	Multiplier
105	9048067	VALVULA DE AJUSTE	PZ	1,0
106	9047020	GRIFO DE LINEA	PZ	1,0
106	9412204	GRIFO DE LINEA	PZ	1,0
107	9047079	GRIFO DESCARGA CONDENSACION	PZ	1,0
108	9051116	REDUCTOR PRESION	PZ	1,0
109	9052255	MANOMETRO	PZ	1,0
109	9052256	MANOMETRO	PZ	1,0
110	9049193	VALVULA DE SEGURIDAD	PZ	1,0
112	9415903	NIPLE	PZ	1,0
116	9038001	TAPON	PZ	2,0
125	9076030	POLEA	PZ	1,0
126	9413432	CORREA POLY V	PZ	1,0
127	9270006	RILSAN PIPE 4/6 BLACK	MT	0,3
131	9063084ATL100	PRESOSTATO COMPLETO	PZ	1,0
132	9065376	CABLE DE ALIMENTACION	PZ	1,0
135	845G004	MOTOR	PZ	1,0
141	9417106	ENCANALADOR	PZ	1,0
142	9417107	PROTECCION PARA CORREA	PZ	1,0
145	9043558	TUBO IMPULSION	PZ	1,0
200	280000L	GRUPO CABEZAL	PZ	1,0
300	9421141	KIT RUEDAS/PIES	PZ	1,0

280000L

GRUPO CABEZAL

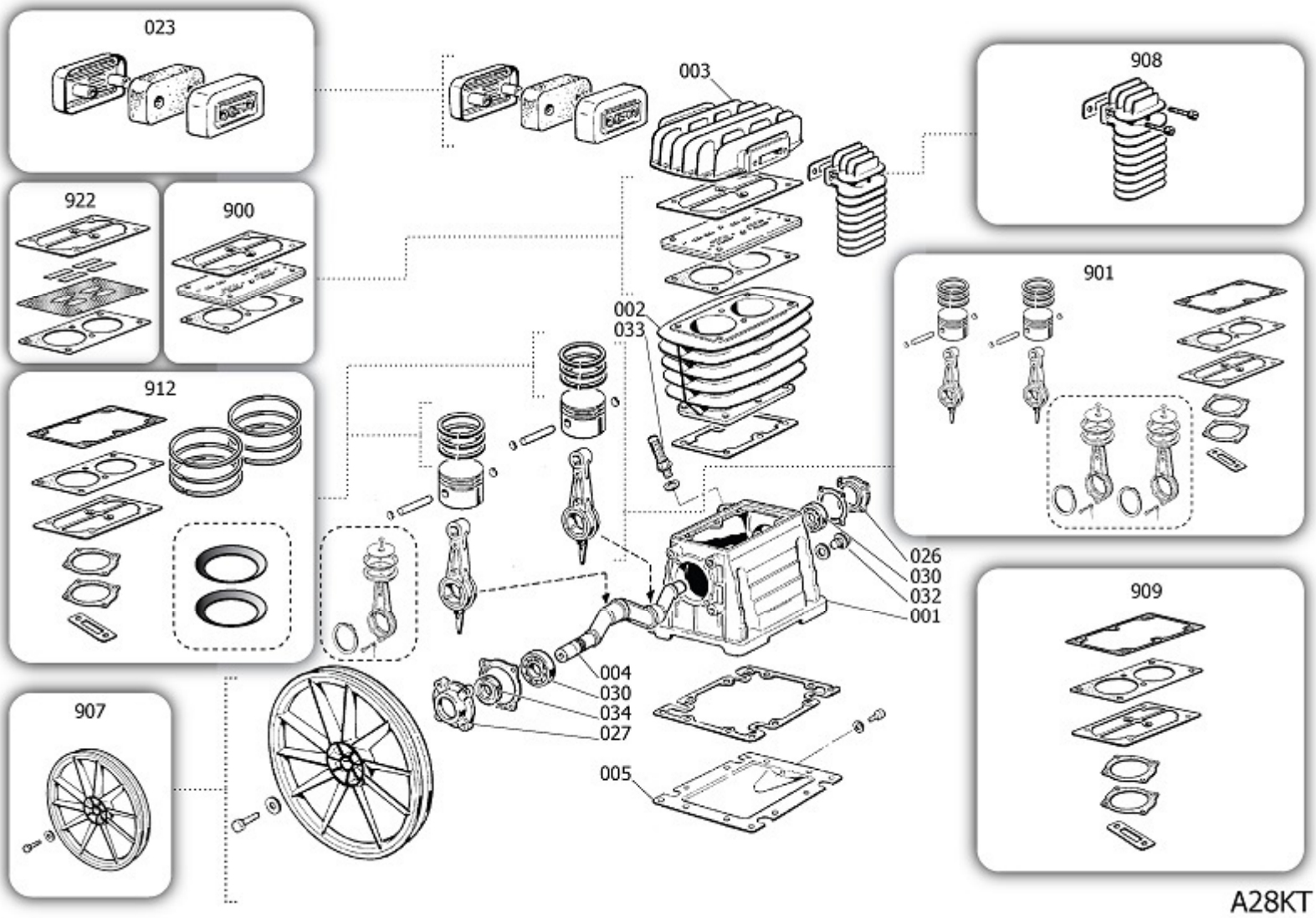

280000L

GRUPO CABEZAL

Pos	Component		MU	Multiplier
1	2860101	CARTER	PZ	1,0
2	2830001	CILINDRO	PZ	1,0
3	3860400	CABEZAL	PZ	1,0
4	2860200	ARBOL	PZ	1,0
5	2660500	TAPA CARTER	PZ	1,0
23	9428110	GRUPO FILTRO AIRE	PZ	1,0
26	2060690	TAPA DELANTERA	PZ	1,0
27	2060500	SOPORTE TRASERO CARCASA	PZ	1,0
30	9170030	6205.P6.C0.V2.Z2.ROHS	PZ	2,0
32	9022025	INDICADOR ACEITE	PZ	1,0
33	9024029	TAPON ACEITE	PZ	1,0
34	9163010	JUNTA	PZ	1,0
900	9434A06	MPK VALVE PLATE B28/B28I/B38	PZ	1,0
901	9434B09	MPK PISTON-CONROD B2800	PZ	1,0
907	9428072	KIT VOLANTE	PZ	1,0
908	9434E06	MPK AFTERCOOLER B28I/B28/B38	PZ	1,0
909	9434F07	MPK GASKET B28/28I/38	PZ	1,0
912	9434C09	MPK PISTON RINGS B2800/B38	PZ	1,0
922	9434H00	MPK MAINTEN.PV B28/B28I/B38	PZ	1,0