Weight / *Peso*: 2,171 kg

Box Dimensions / *Dimensiones Maletín*

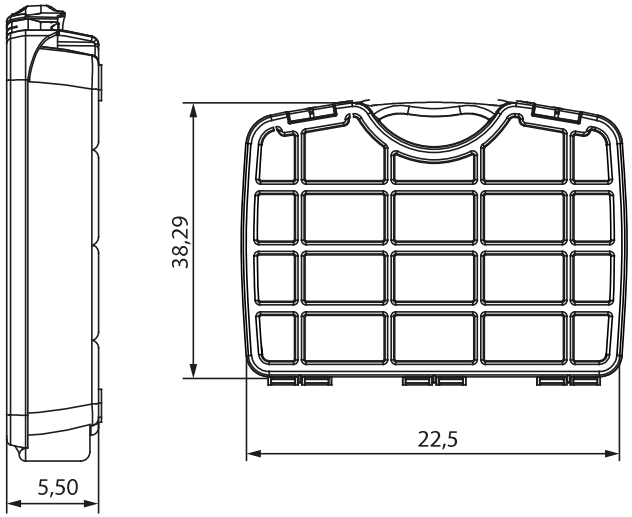

Part nº *Referencia*	Ød1 Nominal Shaft / *Eje*	Quantity *Cantidad*
03500038	5	200
	8	200
	9	200
	10	200
	11	200
	12	100
	13	100
	14	100
	15	100
	16	100
	17	50
	18	50
	19	50
	20	50
	21	50
	22	20
	24	20
	25	20
	28	20
	30	20
	35	10
	38	10
	40	10
	42	10
	45	10

TECHNICAL INFORMATION / *INFORMACIÓN TÉCNICA*

1	**Material Circlip:** ***Material Anillo:***	Steel Spring EN 10132-1/4 DIN 17222 C60S (C60) or C75S (C75) *Acero para muelles EN 10132-1/4 DIN 17222 C60S (C60) o C75S (C75)*
2	**Surface Treatment:** ***Recubrimiento:***	Self finished and oiled or phosphated and oiled *Aceitado antioxidante o fosfatado y aceitado*
3	**Hardness:** ***Dureza:***	HRC 44-51 // 47-54

M10	INITIAL LEVEL 07/03/2022 NEW FORMAT		
LEVEL	DESCRIPTION		
	CUSTOMER	FAMILY 03500038	
SHEET A-4		NAME DIN 471-E ASSORTIMENT BOX *SURTIDO DE ANILLOS DIN 471-E*	
		PART Nº 03500038	
SCALE		NOTES	
GENERAL TOL.		DRAW MVL APPROVED JMG DATE 07/03/22 SIGNATURE	MIKALOR