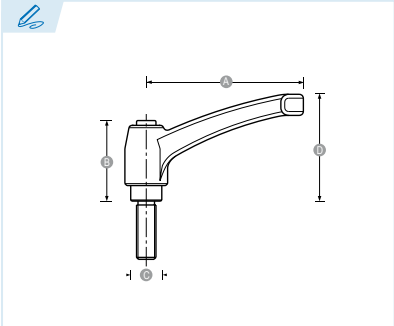

Empuñadura graduable macho
Male indexed clamping handle
Poignée débrayable filetée
Punho graduável macho

Zamak, epoxi negro
Die cast zinc, black powder coated
Zamak (zinc injecté) époxy noir
Zamak, epóxi preto

Material de la espiga: Acero cincado
Male thread material: Zinc plated steel
Tige filetée en acier zingué
Material do pino: Aço zincado

ES EN FR PT

P **Gama preferida**
Preferred range
Gamme préférence
Gama preferida

● **Gama estándar**
Standard rage
Gamme standard
Gama padrão

Temperatura de uso -30ºC / +200ºC
Working temperature
Température d'emploi
Temperaturas de utilização

Otros colores de empuñaduras bajo consulta.
Other handle colors are available by request.
Autres couleurs sur demande.
Outras cores de punho, disponíveis sob consulta.

	Ref.		M	A	B	C	D
	EGZM-43-4-16-N	●	**M4x16**	43	30	10	30
	EGZM-43-4-20-N	●	**M4x20**	43	30	10	30
	EGZM-43-4-25-N	●	**M4x25**	43	30	10	30
	EGZM-43-4-30-N	●	**M4x30**	43	30	10	30
P	EGZM-43-5-16-N	●	**M5x16**	43	30	10	30
	EGZM-43-5-20-N	●	**M5x20**	43	30	10	30
	EGZM-43-5-25-N	●	**M5x25**	43	30	10	30
	EGZM-43-5-30-N	●	**M5x30**	43	30	10	30
P	EGZM-43-5-40-N	●	**M5x40**	43	30	10	30
	EGZM-43-6-16-N	●	**M6x16**	43	30	10	30
	EGZM-43-6-20-N	●	**M6x20**	43	30	10	30
P	EGZM-43-6-25-N	●	**M6x25**	43	30	10	30
	EGZM-43-6-30-N	●	**M6x30**	43	30	10	30
P	EGZM-43-6-40-N	●	**M6x40**	43	30	10	30
	EGZM-43-6-50-N	●	**M6x50**	43	30	10	30
P	EGZM-43-8-25-N	●	**M8x25**	43	30	10	30
	EGZM-43-8-30-N	●	**M8x30**	43	30	10	30
	EGZM-43-8-40-N	●	**M8x40**	43	30	10	30
	EGZM-43-8-50-N	●	**M8x50**	43	30	10	30
P	EGZM-65-6-20-N	●	**M6x20**	65	34	14	45
	EGZM-65-6-25-N	●	**M6x25**	65	34	14	45
	EGZM-65-6-30-N	●	**M6x30**	65	34	14	45
	EGZM-65-6-40-N	●	**M6x40**	65	34	14	45
	EGZM-65-6-50-N	●	**M6x50**	65	34	14	45
	EGZM-65-8-16-N	●	**M8x16**	65	34	14	45
P	EGZM-65-8-20-N	●	**M8x20**	65	34	14	45
	EGZM-65-8-25-N	●	**M8x25**	65	34	14	45
	EGZM-65-8-30-N	●	**M8x30**	65	34	14	45
	EGZM-65-8-35-N	●	**M8x35**	65	34	14	45
P	EGZM-65-8-40-N	●	**M8x40**	65	34	14	45
	EGZM-65-8-45-N	●	**M8x45**	65	34	14	45
	EGZM-65-8-50-N	●	**M8x50**	65	34	14	45
P	EGZM-65-8-60-N	●	**M8x60**	65	34	14	45
	EGZM-65-10-20-N	●	**M10x20**	65	34	14	45
	EGZM-65-10-25-N	●	**M10x25**	65	34	14	45
	EGZM-65-10-30-N	●	**M10x30**	65	34	14	45
	EGZM-65-10-35-N	●	**M10x35**	65	34	14	45
P	EGZM-65-10-40-N	●	**M10x40**	65	34	14	45
	EGZM-65-10-45-N	●	**M10x45**	65	34	14	45
P	EGZM-65-10-50-N	●	**M10x50**	65	34	14	45
	EGZM-65-10-60-N	●	**M10x60**	65	34	14	45
	EGZM-80-8-20-N	●	**M8x20**	80	42	16	57
	EGZM-80-8-25-N	●	**M8x25**	80	42	16	57
	EGZM-80-8-30-N	●	**M8x30**	80	42	16	57

	Ref.		M	A	B	C	D
	EGZM-80-8-35-N	●	**M8x35**	80	42	16	57
	EGZM-80-8-40-N	●	**M8x40**	80	42	16	57
	EGZM-80-8-50-N	●	**M8x50**	80	42	16	57
	EGZM-80-8-60-N	●	**M8x60**	80	42	16	57
	EGZM-80-10-20-N	●	**M10x20**	80	42	16	57
	EGZM-80-10-25-N	●	**M10x25**	80	42	16	57
	EGZM-80-10-30-N	●	**M10x30**	80	42	16	57
	EGZM-80-10-35-N	●	**M10x35**	80	42	16	57
P	EGZM-80-10-40-N	●	**M10x40**	80	42	16	57
	EGZM-80-10-50-N	●	**M10x50**	80	42	16	57
P	EGZM-80-10-60-N	●	**M10x60**	80	42	16	57
	EGZM-80-12-20-N	●	**M12x20**	80	42	16	57
	EGZM-80-12-30-N	●	**M12x30**	80	42	16	57
	EGZM-80-12-40-N	●	**M12x40**	80	42	16	57
	EGZM-80-12-50-N	●	**M12x50**	80	42	16	57
	EGZM-80-12-60-N	●	**M12x60**	80	42	16	57
	EGZM-94-12-20-N	●	**M12x20**	94	50	20	65
P	EGZM-94-12-30-N	●	**M12x30**	94	50	20	65
	EGZM-94-12-40-N	●	**M12x40**	94	50	20	65
	EGZM-94-12-50-N	●	**M12x50**	94	50	20	65
P	EGZM-94-12-60-N	●	**M12x60**	94	50	20	65
	EGZM-94-14-30-N	●	**M14x30**	94	50	20	65
	EGZM-94-14-35-N	●	**M14x35**	94	50	20	65
	EGZM-94-14-40-N	●	**M14x40**	94	50	20	65
	EGZM-94-14-50-N	●	**M14x50**	94	50	20	65
	EGZM-94-14-60-N	●	**M14x60**	94	50	20	65
	EGZM-94-16-30-N	●	**M16x30**	94	50	20	65
	EGZM-94-16-40-N	●	**M16x40**	94	50	20	65
	EGZM-94-16-50-N	●	**M16x50**	94	50	20	65
P	EGZM-94-16-60-N	●	**M16x60**	94	50	20	65
	EGZM-108-12-50-N	●	**M12x50**	108	56	23	75
	EGZM-108-14-40-N	●	**M14x40**	108	56	23	75
P	EGZM-108-14-50-N	●	**M14x50**	108	56	23	75
	EGZM-108-14-60-N	●	**M14x60**	108	56	23	75
	EGZM-108-16-20-N	●	**M16x20**	108	56	23	75
	EGZM-108-16-30-N	●	**M16x30**	108	56	23	75
	EGZM-108-16-40-N	●	**M16x40**	108	56	23	75
	EGZM-108-16-50-N	●	**M16x50**	108	56	23	75
P	EGZM-108-16-60-N	●	**M16x60**	108	56	23	75
	EGZM-108-18-20-N	●	**M18x20**	108	56	23	75
	EGZM-108-18-30-N	●	**M18x30**	108	56	23	75
	EGZM-108-18-40-N	●	**M18x40**	108	56	23	75
	EGZM-108-18-50-N	●	**M18x50**	108	56	23	75
	EGZM-108-18-60-N	●	**M18x60**	108	56	23	75