Modelo 200AH
Amoladora De Pinza Acodada

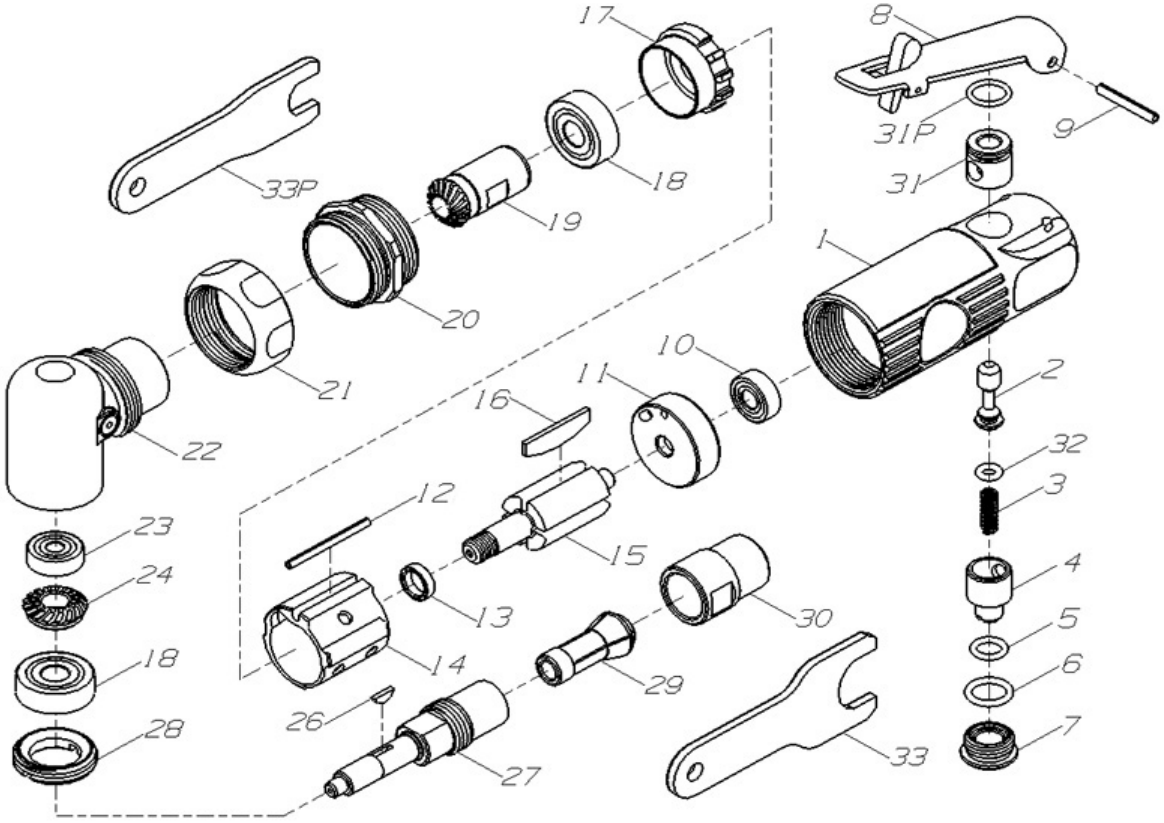

PARTS LIST

No.	Parts No.	Description	Q'ty
1	7734F-01	Motor Housing	1
1P	7734F-01P	Housing Cover	1
2	7734F-02	Valve Stem	1
3	7734F-03	Spring	1
4	7734F-04	Air Regulator	1
5	7734F-05	O-Ring	1
6	7734F-06	O-Ring	1
7	7734F-07	Valve Screw	1
8	7734F-08	Throttle Lever	1
9	7734F-09	Pin	1
10	7734F-10	Ball Bearing	1
11	7734F-11	Rear End Plate	1
12	7734F-12	Pin	1
13	7734F-13	Rotor Collar	1
14A	7734F-14A	Cylinder (Powder Metal)	1
15B	7734F-15B	Rotor (Alloy)	1
16	7734F-16	Rotor Blade	4
17	7734F-17	Front End Plate	1
18	7734F-18	Ball Bearing	2
19	7734F-19	Bevel Gear	1

No.	Parts No.	Description	Q'ty
20	7734F-20	Cap Lock	1
21	7734F-21	Threaded Cap	1
22	7734F-22	Angle Housing	1
23	7734F-23	Ball Bearing	1
24	7734F-24	Bevel Gear	1
26	7734F-26	Key	1
27	7734F-27	Spindle (Alloy)	1
28	7734F-28	Clamp Nut	1
29	7734F-29A	1/4" Collet	1
	7734F-29B	6MM Collet	1
	7734F-29C	1/8" Collet	1
	7734F-29D	3MM Collet	1
29P	7734F-29P	Insert Collet	1
30	7734F-30	Collet Nut	1
31	7734F-31	Valve Bushing	1
31P	7734F-31P	O-Ring	1
32	7734F-32	O-Ring	1
33	7734F-33	Spanner Wrench (L)	1
33P	7734F-33P	Spanner Wrench (S)	1