Modelo 220P
LLAVE DE IMPACTO 3/4"

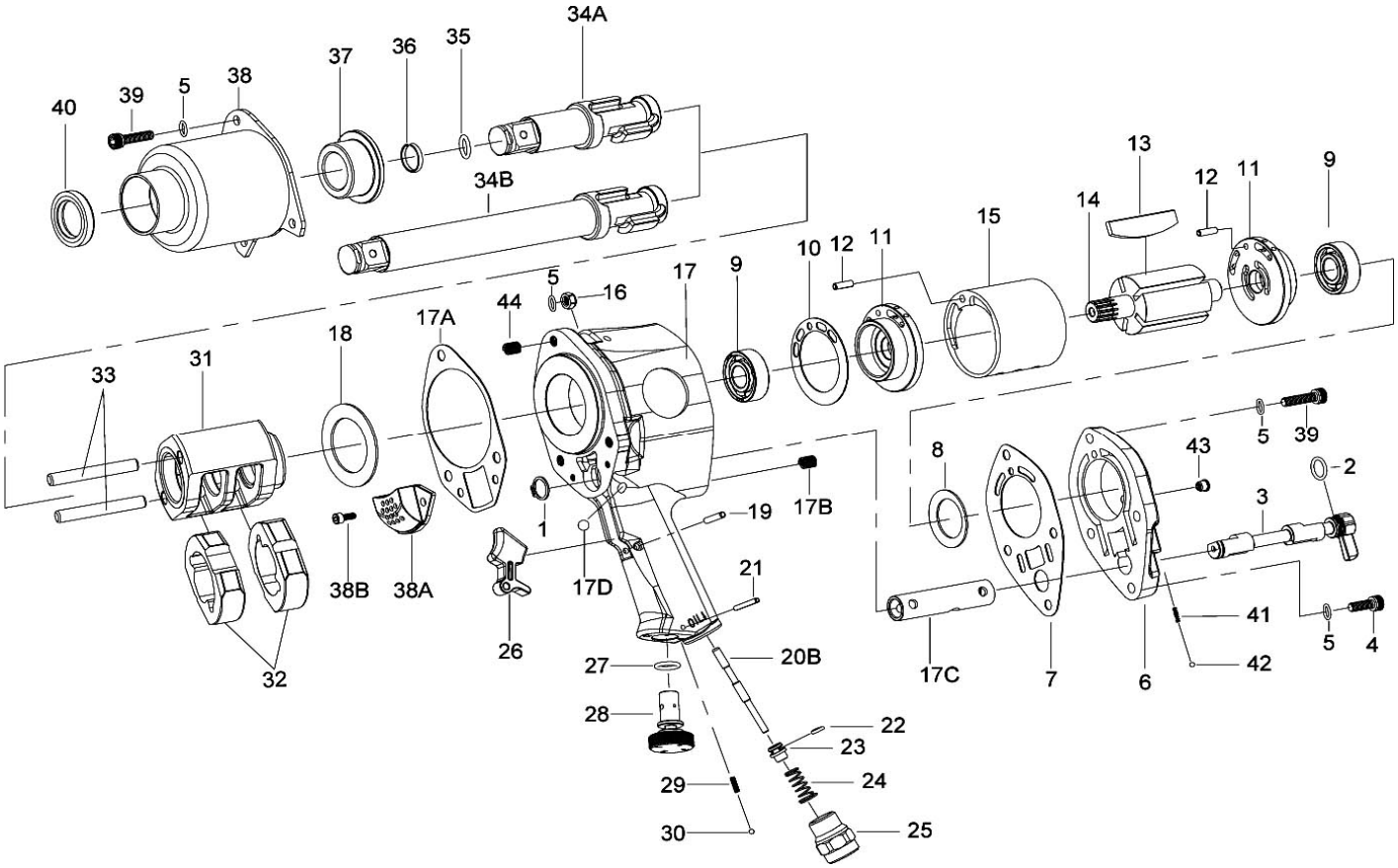

PARTS LIST

No.	Parts No.	Description	Q'ty
1	5566-01	Retainer	1
2	5566-02	O-Ring	1
3	5566-03	Reverse Valve	1
4	5566-04	Screw Assembly [Incl. 5]	1
5	5566-05	Spring Washer	10
6	5566-06	Back Head Assembly [Incl. 43]	1
7	5566-07	Gasket	1
8	5566-08	Motor Clamp Washer	1
9	5566-09	Ball Bearing	2
10	5566-10	Gasket	1
11	5566-11	End Plate	2
12	5566-12	Spring Pin	2
13	5566-13	Rotor Blade	5
14	5566-14	Rotor	1
15	5566-15	Cylinder	1
16	5566-16	Lock Nut [Incl. 5(3)]	3
17	5566-17	Housing Assembly [Incl. 17B(4), 17C, 17D(2), 44(3)]	1
17A	5566-17A	Gasket	1
17B	5566-17B	Heli-Coil	4
17C	5566-17C	Reverse Valve Bushing	1
17D	5566-17D	Steel Ball	2
18	5566-18	Washer	1
19	5566-19	Trigger Pin	1
20B	5566-20B	Throttle Valve Plunger	1
21	5566-21	Spring Pin	1
22	5566-22	O-Ring	1

No.	Parts No.	Description	Q'ty
23	5566-23	Throttle Valve	1
24	5566-24	Spring	1
25	5566-25	Air Inlet	1
26	5566-26	Trigger	1
27	5566-27	O-Ring	1
28	5566-28	Air Regulator	1
29	5566-29	Spring	1
30	5566-30	Steel Ball	1
31	5566-31	Hammer Frame	1
32	5566-32	Hammer	2
33	5566-33	Hammer Pin	2
34A	5566-34A	Standard Anvil [Incl. 35, 36]	1
34B	5566-34B	6" Extended Anvil (Select) [Incl. 35, 36]	1
35	5566-35	O-Ring	1
36	5566-36	Socket Retainer	1
37	5566-37	Bushing	1
38	5566-38	Hammer Case	1
38A	5566-38A	Exhaust Deflector	1
38B	5566-38B	Screw	2
39	5566-39	Screw Assembly [Incl. 5(6)]	6
40	5566-40	Oil Seal	1
41	5566-41	Spring	1
42	5566-42	Steel Ball	1
43	5566-43	Grease Fitting	1
44	5566-44	Heli-Coil	3
TK	5566-TK	Tune-Up Kit [Incl. 2, 7, 9(2), 10, 13(5), 17A, 22, 24, 27, 29, 30, 35, 36, 41, 42]	