Modelo 161PH

LLAVE DE IMPACTO 1/2"

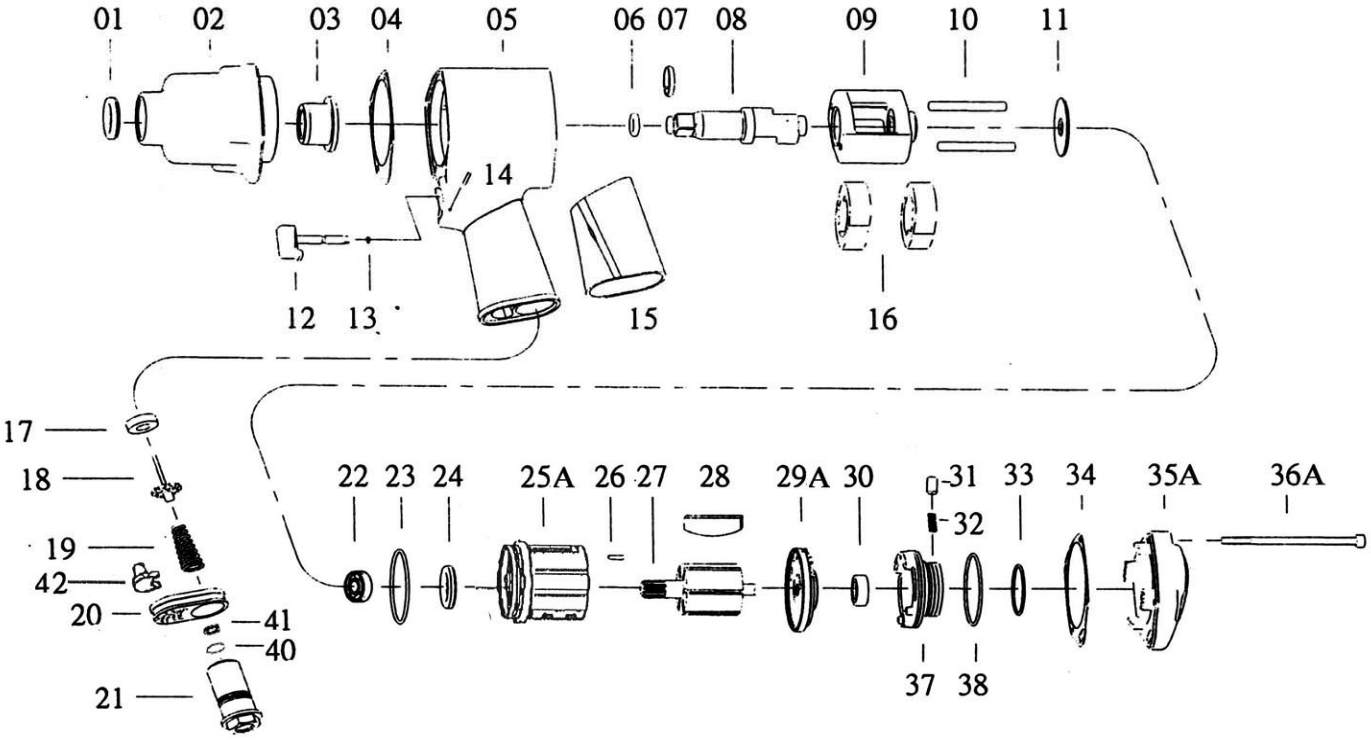

PARTS LIST

No.	Parts No.	Description	Q'ty
1	C504-01	Oil seal	1
2	C504-02	Hammer Case	1
3	C504-03	Bushing	1
4	C504-04	Front Gasket	1
5	C504-05	Motor Housing	1
6	C504-06	O-Ring	1
7	C504-07	Anvil Collar	1
8	C504-08A	1" Anvil	1
	C504-08B	2" Anvil	1
9	C504-09	Hammer Case	1
10	C504-10	Hammer Pin	2
11	C504-11	Washer	1
12	C504-12	Trigger	1
13	C504-13	O-Ring	1
14	C504-14	Spring Pin	1
15	C504-15	Rubber Cover	1
16	C504-16	Hammer Dog	2
17	C504-17	Retainer	1
18	C504-18	Valve Stem	1
19	C504-19	Spring Pin	1
20	C504-20	Exhaust Deflector	1

No.	Parts No.	Description	Q'ty
21	C504-21	Hose Adaptor	1
22	C504-22	Ball Bearing	1
23	C504-23	O-Ring	1
24	C504-24	Oil Seal	1
25A	C504-25A	Cylinder	1
26	C504-26	Spring Pin	1
27	C504-27	Rotor	1
28	C504-28	Rotor Blade	6
29A	C504-29A	Rear Plate	1
30	C504-30	Ball Bearing	1
31	C504-31	Pin	1
32	C504-32	Spring	1
33	C504-33	O-Ring	4
34	C504-34	Rear Gasket	1
35A	C504-35A	Rear Cover	1
36A	C504-36A	Screw	4
37	C504-37	Reverse lever	1
38	C504-38	O-Ring	1
40	C504-40	O-Ring	1
41	C504-41	Washer	1
42	C504-42	Muffler	1