Modelo 150P
LLAVE DE IMPACTO 1/2"

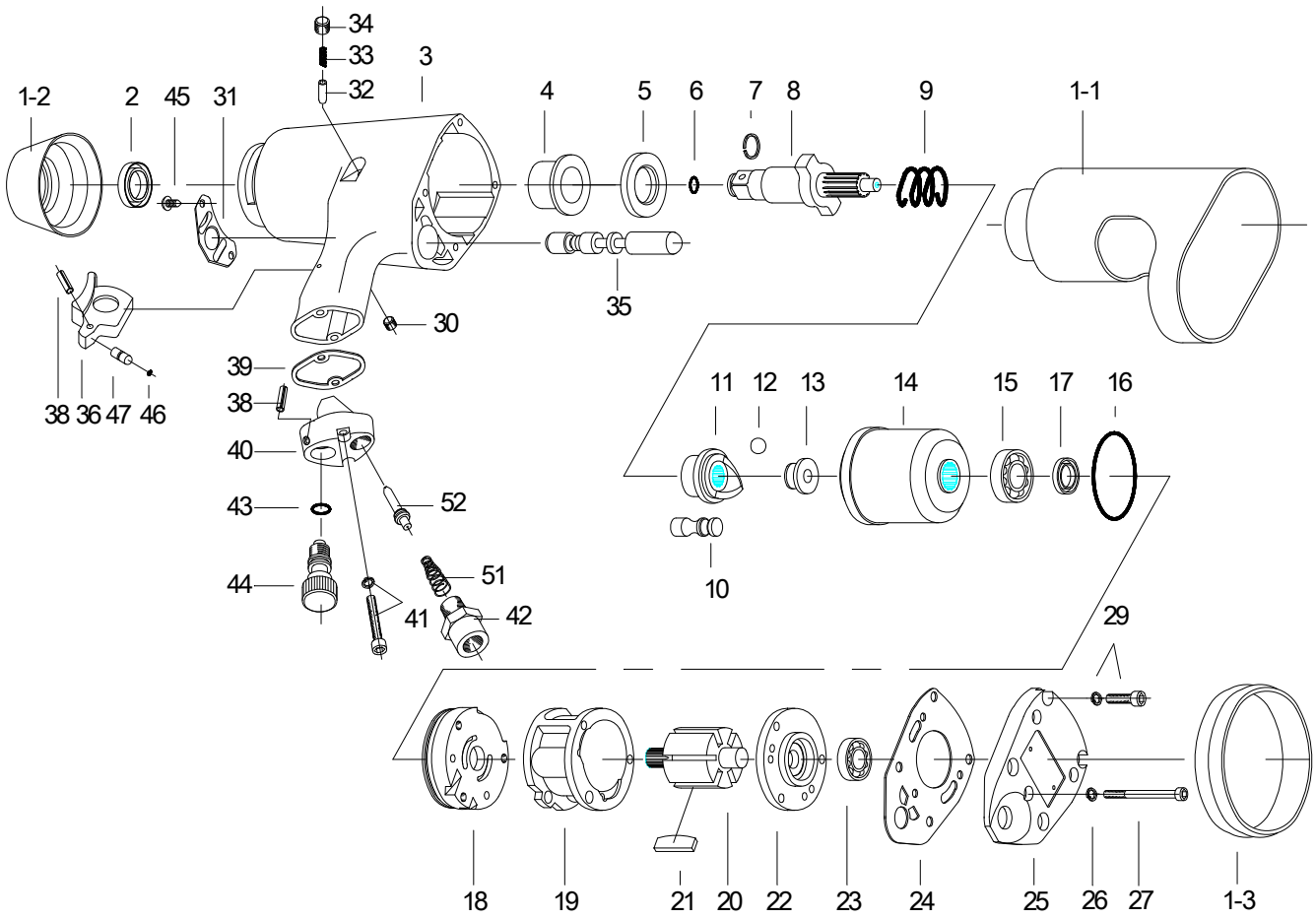

PARTS LIST

No.	Parts No.	Description	Q'ty
01	5541-01-1	Protecting Rubber	1
	5541-01-2	Protecting Rubber	
	5541-01-3	Rubber	
02	5541-02	Oil Seal	1
03	5541-03	Motor Housing	1
04	5541-04	Bushing	1
05	5541-05	Washer	1
06	5541-06	O-Ring	1
07	5541-07	Anvil Collar	1
08	5541-08	Anvil	1
	5541-08-1	2"Anvil	
09	5541-09	Spring	1
10	5541-10	Hammer Pin	2
11	5541-11	Hammer Cam	1
12	5541-12	Steel Ball	1
13	5541-13	Spindle Guide	1
14	5541-14	Hammer Cage	1
15	5541-15	Ball Bearing	1
16	5541-16	O-Ring	1
17	5541-17	Oil Seal	1
18	5541-18	Front End Plate	1
19	5541-19	Cylinder	1
20	5541-20	Rotor	1
21	5541-21	Rotor Blade	6
22	5541-22	Rear End Plate	1

No.	Parts No.	Description	Q'ty
23	5541-23	Ball Bearing	1
24	5541-24	Rear Gasket	1
25	5541-25	Rear Cover	1
26	5541-26	Spring Washer	3
27	5541-27	Screw	3
29	5541-29	Screw	4
30	5541-30	Set Screw	1
31	5541-31	Exhaust Deflrctor	1
32	5541-32	Stop Pin	1
33	5541-33	Spring	1
34	5541-34	Set Screw	1
35	5541-35	Reverse valve	1
36	5541-36	Trigger	1
38	5541-38	Spring Pin	2
39	5541-39	Valve Block Gasket	1
40	5541-40	Valve Block	1
41	5541-41	Screw	2
42	5541-42	Hose Adaptor	1
43	5541-43	O-Ring	1
44	5541-44	Air Regulator	1
45	5541-45	Exh. Deflrctor Screw	2
46	5541-46	O-Ring	1
47	5541-47	Push Pin	1
51	5541-51	Spring	1
52	5541-52	Valve Stem Set	1